THE

WIRELESS ENGINEER

VOL. XV. APRIL, 1938 No. 175

Editorial

Accurate Measurements of the Luxemburg Effect

FOR the last three years the German Postal Authorities have carried out an investigation of the Luxemburg effect—that is, the mutual modulation of two radio transmissions traversing the same region of the ionosphere. The effect, even when most pronounced, is relatively small and extremely difficult to measure with any degree of quantitative accuracy. Such measurements are only possible when the disturbed transmission is unmodulated except for the effect of the disturbing transmission, the modulation of which must be known and maintained constant.

According to the theory worked out by Bailey and Martyn, the effect of a wave passing through the ionosphere is to vary the mean velocity of the electrons and thus to vary the frequency of collision and with it the absorption coefficient of the layer. This variation takes place so rapidly that it is able to follow the changes of amplitude due to the modulation of the wave, with the result that the modulation of the disturbing transmission is reproduced in the variations of the absorption coefficient of the layer. Another wave, initially unmodulated, passing through this same region of the ionosphere, will suffer a variable attenuation and emerge with the disturbing modulation impressed upon it. Bailey and Martyn concluded that (1) the impressed modulation would be proportional to the power radiated by the disturbing station—that is, to the square of its field strength; (2) that it would increase with the wavelength of the disturbing transmission; (3) that it would increase as the modulating frequency decreased; (4) that it would depend upon the two waves traversing the same stratum of the ionosphere in the same geographical region—this depends upon frequency and angle of incidence; (5) that, although the effect had been observed during the night, when the space waves were strongest, the disturbing effect should be most pronounced at midday if there are any space waves to be affected.

The German authorities have made a series of experiments to check the correctness of these predictions. In 1935 the two stations employed were Heilsberg (1031 kc/s) and Zeesen (191 kc/s) and measurements were made at various points between Berlin and Trier. The results were in general agreement with the predictions, the maximum modulation observed being about 1 per cent.

In 1936, as the result of many complaints from the centre of Germany that the Vienna programme was interfered with by the Prague transmission, a similar series of measurements was made with the co-operation of these two transmitters. Then in 1937 a further series of tests were made using the Berlin, Leipzig and Zeesen transmitters. For the 1936 and 1937 tests a much improved portable apparatus was employed, in which the H.F. circuits were very sharply tuned and the L.F. circuits fitted with a narrow bandpass filter adjusted to pass the modulation frequency ± 10 cycles per second. These precautions are essential in order to distinguish between a deflection due to the disturbing transmission,

www.americanradiohistory.com

which may only cause a modulation of a fraction of 1 per cent., and a deflection due to atmospheric and other disturbances.

The Prague-Vienna tests were made between 1.30 and 4.30 a.m. during the first week of April, 1936. Vienna (592 kc/s) radiated at full power unmodulated, while Prague (638 kc/s) radiated with 70 per cent. modulation at a frequency of 400, starting at full power and reducing it systematically. Both stations are rated at 120 kW. The measuring apparatus started at the Bohemian frontier and traversed Germany to the Danish frontier, a distance of about 600 km. The observed interference increased with the distance up to a distance of 700 to 800 km. from Vienna; beyond this it decreased. A similar result had been obtained in the earlier tests. The maximum modulation observed was 1.3 per cent., a surprisingly high figure for two medium wave stations. So far as one could tell, the variation with the power of the disturbing transmitter agreed with Bailey and Martyn's prediction.

On repeating these experiments in 1937, using Berlin (841 kc/s) and Leipzig (785 kc/s) as the two stations and traversing Germany from the N.E. to the S.W. corner, a surprising result was obtained, for although the tests were made in the same month and at the same time of night, with wavelengths. differing little from those previously employed, the measured modulation was only about a tenth of that previously observed. Such a result is, however, perhaps not so surprising in view of the complexity and variable character of the various phenomena involved.

From the locations of the unmodulated transmitter and the observer one can determine the point in the ionosphere at which reflection occurs, and can then determine the distance r of this point from the disturbing transmitter and the angle which the disturbing radiation makes with the aerial. Knowing how the radiated field varies with this angle, one can calculate the field strength $\mathcal{E}$ at the relevant point in the ionosphere, and assuming the correctness of the $\mathcal{E}^2$ law of Bailey and Martyn, one can determine how the impressed modulation M should vary as the distance is increased. This is not the observed modulation, however, because the received signal is made up of a ground wave which has suffered no modulation, as well as one or more space waves which have been affected during reflection. The modulation M is thus reduced to a smaller value m, and, as a rough approximation, one may write $m = M \frac{s}{s+g}$, where s and g are the magnitudes to any common scale of the received space and ground waves, respectively. This is a simple dilution formula, and ignores questions of phase difference. This is discussed fully in the Report of the German Post Office,* and the calculated curves drawn corresponding to the series of measurements, the scale being chosen to make them agree approximately with the observations, since the calculations are only relative. The agreement is as good as one could expect in view of the complexity of the phenomenon and the simplifying assumptions made.

It was generally found that when fading occurred the percentage modulation remained constant—that is, that the modulation amplitude varied with the carrier amplitude. This is consistent with the fading being due to interference between two similarly modulated space waves which have followed somewhat similar paths. Occasionally fading was accompanied by large variations in the percentage modulation, such fading being presumably due to interference between waves which had followed very different paths.

Tests were usually made between 1.30 and 4.30 a.m., but a special series was made between 3.0 and 5.30 a.m. to test the effect of daybreak; contrary to what might have been expected from item (5) of the predictions of Bailey and Martyn, the degree of modulation was always found to decrease at daybreak.

Tests were made to determine the degree of permissible disturbing modulation and it was found that under certain circumstances 1 per cent. was not permissible. This is confirmed by the complaints received concerning the modulation of Vienna by Prague, since the highest measured modulation was only 1.3 per cent.

The Report concludes by pointing out the need for further work of a fundamental character on this important phenomenon.

G. W. O. H.

* J. Grosskopf, *Hochfztech u. Elektzakus.*, Jan. 1938, p. 18.

www.americanradiohistory.com

The Modulation Response and Selectivity Curves of a Resonant Circuit Loaded by a Diode Rectifier*

By F. C. Williams, M.Sc., D.Phil.

(*Manchester University*)

1. Introduction

IN a recent paper[1] the author reported an investigation of the free oscillations of a resonant circuit loaded by a diode peak rectifier. The circuit considered is shown in Fig. 1.

It was shown that if such a circuit is momentarily energised and then allowed to oscillate freely, the voltage oscillations across C_1 are governed by the equation :—

$$e = \hat{e}_0 \epsilon^{-t/T_3} \sin\left(\sqrt{\frac{1}{L_1C_1} - \frac{1}{T_3^2}}\right)t$$

in which equation $t = 0$ when e has a peak value $\hat{e}_0$.

Also :—

$$T_3 = 2R_1C_1 \cdot \frac{1 + \dfrac{aC_2}{C_1}}{1 + \dfrac{2aR_1}{R_2}} = \alpha T_1$$

where T_1 is the time constant of the resonant circuit given by

$$T_1 = 2R_1C_1$$

and $$\alpha = \frac{1 + \dfrac{aC_2}{C_1}}{1 + \dfrac{2aR_1}{R_2}} \quad \ldots \quad \ldots \quad (1)$$

In these equations a is the ratio of the rectified voltage across C_2 to the peak value of the oscillation across C_1. a approaches unity in most cases.†

This result was discussed with reference to the effective input resistance of the rectifier $\left(\frac{R_2}{2a}\right)$ deduced by other writers[2] [3], and shown to be inconsistent with the assumption of such effective resistance : it was shown that the representation of the rectifier as an effective resistance $\frac{R_2}{2a}$ was valid only when the input amplitude was constant, and then only when the steady state had been reached.

Several papers‡ have been published in which the modulation response curves and selectivity curves of circuits such as Fig. 1 have been discussed. In these papers the rectifier has been replaced in the analyses by its supposed effective resistance. Some results deduced in these papers are at fault, since the assumption of this effective resistance is not universally valid. The present paper discusses the modulation response and selectivity curves of the combination without such assumption.

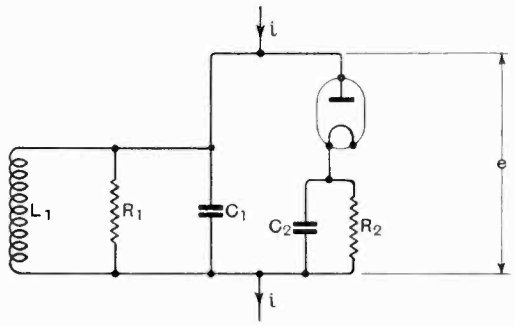

Fig. 1.

Certain well-known conditions§ must be satisfied if the rectifier output is to be an undistorted reproduction of the input modulation : this paper will proceed on the assumption that these conditions are satis-

* MS. accepted by the Editor, July, 1937.

† See Appendix 3 and Bib. (1) for fuller information.

‡ For example, Bib. (4) and (5).

§ See Bibliography. The conditions are summarised in Bib. (1).

www.americanradiohistory.com

fied. They are discussed at the end of the paper, and a suitable practical rule ensuring undistorted rectification is deduced, which is simpler to apply than those given in earlier papers.‖

2. The Frequency Response Curve with Unmodulated Inputs

If the circuit of Fig. 1 is supplied with a current $i = \hat{\imath} \sin pt$ as shown, a sinusoidal voltage of constant amplitude will ultimately be developed across C_1. Under such circumstances, the rectifier can be replaced by an equivalent resistance $\frac{R_2}{2a}$. The total effective shunt resistance is then

$$\frac{R_1 R_2}{(R_2 + 2aR_1)} = \beta R_1, \text{ where } \beta = \frac{1}{1 + \frac{2aR_1}{R_2}} \qquad (2)$$

Hence from appendix 1 the p.d. across the condenser C_1 is

$$e = \frac{\beta R_1 \hat{\imath}}{\sqrt{1 + \beta^2 T_1^2 \omega^2}} \sin\{(p_0 + \omega)t - \arctan \beta T_1 \omega\}$$

where $\omega = p - p_0$, $\frac{p_0}{2\pi}$ being the resonant frequency of the circuit $L_1 C_1 R_1$, and $\frac{\omega}{p_0}$ is supposed small.

If $\hat{e}$ is the peak value of e, then

$$\hat{e} = \frac{\beta R_1 \hat{\imath}}{\sqrt{1 + \beta^2 T_1^2 \omega^2}} \quad \cdots \quad \cdots \quad (3)$$

The radio frequency response curve of the combination can be plotted from this expression. The maximum ordinate will be given when $\omega = 0$, and will be proportional to βR_1. If now $\hat{\imath}$ is held constant and ω varied by adjustment of p about p_0, a symmetrical response curve will be obtained. The exact symmetry is due to approximations made in appendix 1; the approximations are justified in most practical cases. The width of the curve varies inversely with βT_1. If the definition of band width be taken as one-half the band enclosed between ordinates $\frac{1}{\sqrt{2}}$ of the maximum ordinate, the band width is numerically equal to $\frac{1}{\beta T_1}$, in terms of ω.

‖ Bibliography (2), (3) and (6).

Since the above curve yields the response relevant to any degree of mistuning it will be termed the "tuning curve" of the system. If the rectifier is disconnected equation (3) still applies provided β is made equal to unity. With the rectifier connected β is essentially less than unity, see equation (2).

It follows that connection of a rectifier to a resonant circuit reduces the sensitivity

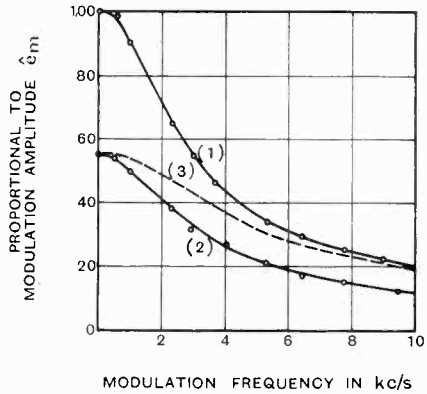

Fig. 2.—*Modulation Response curves for the circuit of* Fig. 1. (1) *Resonant circuit only;* (2) *Complete circuit, prediction from equation* (5); (3) *Complete circuit, prediction based on Section* 2. *The plotted points are experimental results.*

(i.e., the response to a given stimulus) and broadens the tuning curve.

3. Response to a Modulated Signal

Similar results to those obtained in section 2 have been used to determine the response of the combination to modulated signals. The modulated signal is first split into carrier and side wave component sinusoids; the response to each component is calculated and the several output sinusoids recombined to yield the output modulated wave. Calculation by this process leads to the conclusion that the sensitivity is reduced and that modulation band width is increased by connecting a rectifier to a resonant circuit. However, this process is valid only when superposition is permissible, that is, when the system contains only linear impedances. It is invalid in the present case, for, as explained in section 1, the rectifier is no longer replaceable by a linear equivalent resistance.

Appendix 2 shows that if the resonant

www.americanradiohistory.com

circuit of Fig. 1, with the rectifier absent, is fed with a modulated R.F. current $i = \hat{i}(1 + K\cos\omega t)\sin p_0 t$, there results an output voltage :—

$$e = R_1\hat{i}\left(1 + \frac{K}{\sqrt{1 + T_1^2\omega^2}}\cos(\omega t - \arctan T_1\omega)\right)\sin p_0 t \quad \ldots \quad (4a)$$

where $\frac{p_0}{2\pi}$ is the resonant frequency of the circuit.

Appendix 3 shows that when the rectifier is connected the output voltage is given by

$$e = \beta R_1\hat{i}\left(1 + \frac{K}{\sqrt{1 + \alpha^2 T_1^2\omega^2}}\cos(\omega t - \arctan \alpha T_1\omega)\right)\sin p_0 t \quad \ldots \quad (4b)$$

$$\text{where } \alpha = \frac{1 + \frac{aC_2}{C_1}}{1 + \frac{2aR_1}{R_2}} = \left(1 + \frac{aC_2}{C_1}\right)\beta \quad \ldots \quad (1a)$$

Thus, as might be expected, the response of the combination is dependent on the time constant αT_1 deduced for decaying oscillations.*

On the other hand, calculation as outlined above, based on section 2, yields the result

$$e = \beta R_1\hat{i}\left(1 + \frac{K}{\sqrt{1 + \beta^2 T_1^2\omega^2}}\cos(\omega t - \arctan \beta T_1\omega)\right)\sin p_0 t \quad \ldots \quad (4c)$$

If the circuit of Fig. 1 is energised by a modulated wave whose carrier frequency is the circuit resonant frequency and whose modulation is of fixed depth but adjustable frequency, a "modulation response curve" similar to the "tuning curve" of section 2 can be plotted for positive value of ω.

Thus it follows from equation (4b) that if $\hat{e}_m$ is the peak value of the sinusoidal variation of amplitude of the output voltage e, then

$$\hat{e}_m = \frac{\beta R_1\hat{i}K}{\sqrt{1 + \alpha^2 T_1^2\omega^2}} \quad \ldots \quad (5)$$

and this is the equation of the "modulation response curve."

In the absence of the rectifier this result holds with $\alpha = \beta = 1$: with the conditions relevant to equation (4c) the result is given by writing β for α in equation (5).

Since α is always greater than β (see equation 1a), and since β is less than unity, it follows that the sensitivity of the circuit to modulation of any frequency is reduced by rectifier connection, but since α may be greater or less than unity the modulation band width $\left(\frac{1}{\alpha T_1}\right)$* may be either decreased or increased by such connection. This last result is at variance with general belief based on equation (4c), for the band width then deduced is $\frac{1}{\beta T_1}$, which is essentially greater than the circuit band width $\frac{1}{T_1}$.

The analysis has been verified experimentally by checking equation (5).

The experimental technique was quite straightforward and merits no detailed description. A circuit was set up as shown in Fig. 1, and was supplied with a modulated signal. The method of supply was not that shown in Fig. 1, but made use of a small coil coupled to L_1. It is pointed out in appendix 1 that the general result is not appreciably influenced by the method of supply; the experimental results confirm that view.

Modulation amplitude was measured with a cathode-ray oscillograph; the input carrier level and modulation depth were kept constant throughout each series of experiments, the modulation frequency alone being varied.

Several checks of equation (5) were performed with different circuit conditions; in all cases good agreement was found. Fig. 2 shows a typical set of results. In this figure the ordinates represent output modulation amplitude $\hat{e}_m$; the abscissae are modulation frequencies in kc/s. The carrier frequency was 250 kc/s. Curve 1 was obtained with the rectifier cold and refers to the circuit alone. It has been given a maximum ordinate of 100. It was used to determine

* See Introduction and Bib. (1).

* See Section 2.

www.americanradiohistory.com

the value of the loss resistance R_1. The other circuit parameters being known, curve 2 was calculated from equation (5) and corresponds with $\alpha = 0.92$ and $\beta = 0.55$. The plotted points are the experimental results. The dotted curve represents the expectation with α replaced by β in equation (5); that is, it represents the inaccurate prediction derived from section 2 by the side band method. It can be seen at once that such prediction is invalid.

4. The Selectivity of the Combination

Selectivity curves are often delineated by means of a single input signal of adjustable frequency. At each frequency setting a steady state is reached, and the conditions obtaining are those of section 2. It follows that the resulting curve is governed by the equation

$$\hat{e} = \frac{\beta R_1 \hat{\imath}}{\sqrt{1 + \beta^2 T_1^2 \omega^2}} \quad .. \quad (3) \text{ (section 2)}$$

Hence the selectivity is apparently reduced by rectifier connection, for β is less than unity.

It might appear therefore that the combination has the undesirable property of combining poor selectivity with a relatively narrow modulation response curve. Such is not the case, for selectivity is important only when at least two signals are present. Under such circumstances, the steady state visualised in section 2 is never attained and the selectivity curve of equation (3) is invalid. If the circuit is tuned to one of the two signals, and if their magnitudes and frequency difference are such that the tuned signal develops the greater output voltage, then the untuned signal can be regarded as a side wave of the tuned signal, and it is known* that under such circumstances the form of the circuit oscillations is closely analogous to that obtaining with a true modulated wave. By analogy with the modulated wave treated in section 3 it therefore appears that the peak value, $\hat{e}_m$, of the amplitude modulation produced by "beating" will be governed by the equation

$$\hat{e}_m = \frac{\beta R_1 \hat{\imath}_2}{\sqrt{1 + \alpha^2 T_1^2 \omega^2}} \quad .. \quad .. \quad (5a)$$

* See, for example, Radio Research Board Report No. 12.

where now $\hat{\imath}_2 \sin (p_0 + \omega)t$ is the input "off tune" signal.

It may be noted that in the absence of a rectifier α and β are both unity and equations (3) and (5a) yield the same selectivity curve. With the rectifier present such is never the case, for α is always greater than β.

It follows that the true "two-signal" selectivity curve obeys the same laws as the modulation response curve; selectivity and modulation band width being interdependent in the usual manner. The "one signal" selectivity curve, on the other hand, bears no fixed relation to the true selectivity or to the modulation response curve; hence the term "tuning curve" introduced in section 2.

These conclusions have been tested experimentally. The experimental procedure was as follows:—

The circuit of Fig. 1 was supplied from

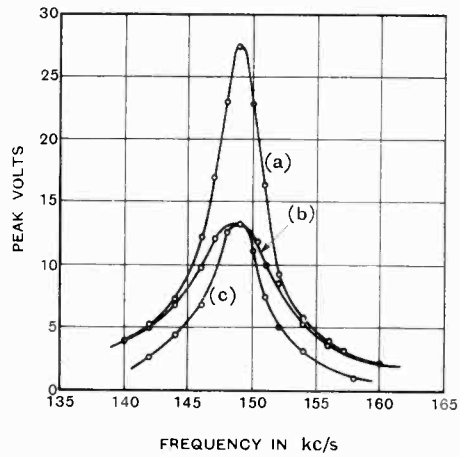

Fig. 3.—*Selectivity and tuning curves for the arrangement of* Fig. 2. (*a*) *Coincident selectivity and tuning curves for the resonant circuit only;* (*b*) *Tuning curve for the complete circuit* (*one signal*); (*c*) *Selectivity curve for the complete circuit* (*two signals*).

two independent sources: A, a source yielding an output of constant amplitude and of frequency equal to the circuit resonance frequency; B, a source yielding an output of constant amplitude less than that of A and of adjustable frequency. Frequency response curves were plotted under different conditions and are shown by curves (a), (b) and (c) of Fig. 3.

For curve (a) the valve was cold and A was switched off. The curve shows the

www.americanradiohistory.com

circuit output voltage, measured with a slide back voltmeter connected across C_1, as a function of the frequency of B. The result refers to the circuit alone and the relevant equation is

$$\hat{e} = \frac{R_1 \hat{i}_B}{\sqrt{1 + T_1^2\omega^2}} \quad \ldots \quad \ldots \quad (5c)$$

For curve (b) conditions were unchanged except that the valve was switched on. Conditions were then those of section 2, the relevant equation being

$$\hat{e} = \frac{\beta R_1 \hat{i}_B}{\sqrt{1 + \beta^2 T_1^2\omega^2}} \quad \ldots \quad \ldots \quad (3a)$$

For curve (c) conditions were as in (b) except that A was introduced. The ordinates of this curve represent the peak value of the amplitude modulation, resulting from interaction of A and B. They were obtained by noting the reduction in peak voltmeter reading when B was switched off. The relevant equation is

$$\hat{e}_m = \frac{\beta R_1 \hat{i}_B}{\sqrt{1 + \alpha^2 T_1^2\omega^2}} \quad \ldots \quad \ldots \quad (5d)$$

Curve (a) represents the coincident tuning and selectivity curves of the circuit alone. The value of R_1 was deduced therefrom, C_1 being known.

Curve (b) is the tuning curve for the combination, two values of β were deducible, one from the ratio of the ordinates of (a) and (b) at resonance and one from the band width of (b). They were 0.485 and 0.53 respectively. The calculated value was 0.5 (equation 2).

Curve (c) is the selectivity curve of the combination. It may be seen that the ordinate at resonance equals that of (b) in accordance with equation (3a) and (5d). The value of α deduced from curves (a) and (c) is 0.96, the calculated value being 0.98 (equation 1a).

These results confirm the view that selectivity may be either increased or decreased by connecting a rectifier to a resonant circuit according as the circuit constants are such that α is greater or less than unity, and that tuning is inevitably broadened by such connection.

The differentiation between tuning curves and selectivity curves gives rise to two interesting properties. The first is similar in result to the well-known "demodulation effect."

Thus, suppose the combination is tuned to a station whose carrier is temporarily absent. The response to the carrier of a second station displaced from resonance would be given by curve (b). The response to the modulation is somewhat problematical, and is discussed later; it is sufficient now to assume it to be roughly proportional to the carrier response. When the wanted carrier is switched on, conditions are such that curve (c) is relevant, and the response to the unwanted carrier, governed by curve (c), is reduced. The arrival of the wanted carrier therefore reduces the response to the unwanted carrier, and presumably reduces also the response to its modulation.

A second interesting property is associated with the response to the modulation of a signal slightly off resonance. Since the tuning curve may be made broad without loss of selectivity it appears possible that high selectivity could be combined with non-critical tuning. Whether or not such is the case depends upon the degree of symmetry obtained in "two-signal" selectivity curves when the larger signal is not tuned exactly to resonance. If such curves are seriously unsymmetrical, distortion of modulated signals will result, but it is unlikely that the extent of such distortion will be as great as that corresponding to an equal degree of distuning with coincident selectivity and tuning curves. The problem does not appear amenable to analysis, and a complete experimental investigation has not yet been made.

5. Conditions Necessary for Undistorted Rectification

The conditions necessary for undistorted rectification have been fully discussed elsewhere [1] [2] [6]. In particular, it has been shown [2] [6] that the depth and frequency of modulation must satisfy the condition :—

$$K' \leqslant \frac{1}{\sqrt{1 + R_2^2 C_2^2 \omega^2}}$$

where R_2 and C_2 are the rectifier load components, $\frac{\omega}{2\pi}$ is the modulation frequency, and K' is the modulation depth of the signal applied to the rectifier. In general, the

www.americanradiohistory.com

modulation depth is known only at the receiver input terminals, and can there be stated to be less than unity. Hence, taking unit modulation depth at the input, first supposed applied direct to the rectifier resonant circuit, the above condition can be restated from equation (4b) as

$$\frac{1}{\sqrt{1 + \alpha^2 T_1^2 \omega^2}} \leqslant \frac{1}{\sqrt{1 + R_2^2 C_2^2 \omega^2}}$$

or

$$R_2 C_2 \leqslant \alpha T_1$$

But from equation (1), $\alpha = 1$ when $T_1 (= 2R_1C_1) = R_2C_2$. Hence the limiting condition can be written as

$$\alpha = 1$$

$$\text{or} \quad R_2 C_2 = T_1$$

Hence, if signals with 100 per cent. modulation are to be applied to the rectifier stage, α must not exceed unity if rectification is to be distortionless. Effective input modulation depths greater than 100 per cent. are possible, however, for the carrier of an interfering station may exceed that of the wanted station at the input. If such were the case the condition above would be insufficient, and lower values of R_2C_2 would be required. It seems unlikely, however, that a single circuit would be sufficient to prevent bad interference in such cases, and it may be presumed that further circuits would be employed which would ensure that the wanted signal was greater than the unwanted signal at the input to the rectifier stage. The above criterion is then sufficient.

In the presence of such further circuits α may be permitted to exceed unity, but the extent of such permissible excess is difficult to calculate and depends on particular conditions.

It may also be noted that in so far as distortionless rectification of modulated signals is concerned, it is sufficient to make R_2C_2 less than the time constant of the most selective preceding resonant circuit: this is not necessarily the one supplying the rectifier. In such cases values of α greater than unity are permissible. A suitable all-round condition for the choice of R_2C_2 might therefore be

$$R_2 C_2 \leqslant T$$

where T is the time constant of the most selective pre-rectification circuit. Where optimum selectivity is required the limiting value, $R_2C_2 = T$, should be chosen, for α increases with R_2C_2.

6. Rectifiers Fed from Band-Pass Filters

In practice, rectifiers are often fed from band pass filters. The goodness of the filter characteristic depends on accurate matching of the two arms. The connection of a rectifier to one arm reduces the sensitivity and modifies the time constant of that arm, and may prevent the attainment of the required characteristic. Further, it is impossible to match the unloaded arm to the loaded arm by adding resistive damping, for the rectifier is not equivalent to such resistance. The addition of resistance can give compensation for either the α or the β of the preceding analysis, but cannot compensate simultaneously for both. Hence it appears preferable to supply the rectifier from a resonant circuit rather than a band pass filter.

Where band pass filter supply is used, a resonant circuit should be included in the pre-rectification amplifier, and the rectifier time constant (R_2C_2) should be made equal to or less than the time constant of that circuit.

7. Response to Complex Modulations

If the modulation is not a simple sinusoid, the input can be written

$$i = \hat{\imath}(1 + \Sigma K_a \cos(\omega_a t + \phi_a) \sin p_0 t.$$

A direct solution of this case is not possible, but the inverted process of analysis adopted in appendix 3 can be applied. The analysis is exactly parallel and yields ultimately an output voltage

$$e = \beta R_1 \hat{\imath} \left\{ 1 + \Sigma \frac{K_a}{\sqrt{1 + \alpha^2 T_1^2 \omega_a^2}} \cos(\omega_a t + \phi_a - \text{arc tan } \alpha T_1 \omega_a) \right\} . \sin p_0 t$$

Comparison with equation (4b), section 3, shows that the sinusoidal components of complex modulations can be dealt with in turn, the final result being obtained by superposition. That is, the simple side band method of calculation can be used provided the true selectivity curve of the combination is used to evaluate the response to the component side waves.

www.americanradiohistory.com

This result may appear to be at variance with the statement in section 3 that superposition is invalid in circuits containing non-linear conductors. This statement remains generally true, but in this particular instance the non-linearity of the rectifier branch is entirely compensated by using the true time constant of the combination, αT_1, in the analysis.

The condition for undistorted rectification remains unchanged, for it has been shown (1) that the rectifier output voltage follows the envelope of the circuit oscillations provided the fractional rate of fall of amplitude of the voltage applied to the rectifier does not exceed the inverse of the time constant of the rectifier load circuit. With input modulation depths of 100 % or less, the fractional rate of fall in amplitude of the voltage applied to the rectifier cannot exceed that obtaining in conditions of free oscillation, for which condition

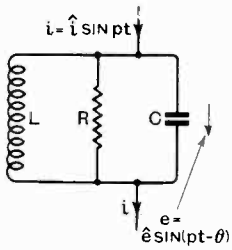

Fig. 4.

$$\alpha \not> 1$$

was shown [1] to be a sufficient criterion. The argument then proceeds as in section 5.

8. Conclusions

It is concluded that the modulation response curve and "two signal" selectivity curve of a resonant circuit are narrower or broader than those of the circuit alone, according as the circuit constants are such that α is greater or less than unity. On the other hand, the sensitivity of the combination is always less than that of the circuit alone.

There exists a marked difference between the "two signal" selectivity curve and the "one signal" tuning curve. The band widths are respectively proportional to $\frac{1}{\alpha}$ and $\frac{1}{\beta}$, and α is always greater than β. Since α may be several times greater than β "one signal" selectivity tests can be very misleading. Further, it appears that it may be possible to combine broad tuning with adequate selectivity by careful design of the rectifying stage; this has not been fully investigated.

Certain conditions must be satisfied to ensure distortionless rectification. Of these, the most important is concerned with the choice of the rectifier load-circuit time-constant. Any value not greater than the time constant of the most selective pre-rectification resonant circuit will suffice, but a value equal to that time constant is preferable since optimum selectivity is thereby attained. The practice of supplying the rectifier from a band pass filter appears questionable, since the two arms cannot be completely matched. Where such supply is used a resonant circuit should be employed elsewhere to permit the use of the above rule for the choice of rectifier components. Distortionless rectification is then ensured.

9. Acknowledgments

The research described in this paper was carried out in the Electrotechnics Department of Manchester University. The author is indebted to Professor R. Beattie for the facilities placed at his disposal, and to Mr. W. Makinson, M.Sc., for assistance with the experimental work.

APPENDIX 1

Fig. 4 represents a resonant L.R.C. circuit in which the losses are represented by the shunt resistance R. It is supposed fed with a current $i = \hat{i} \sin pt$, as shown. The type of feed and the method of representing the losses are chosen for analytical convenience; the ultimate results, with obvious modifications, apply equally well to the more usually considered case of series injection and series representation of losses.

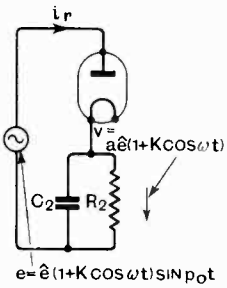

Fig. 5.

There results, in the steady state, a sinusoidal voltage across C_1, say $e = \hat{e} \sin (pt - \theta)$.

Let I and E be the vectors representing i and e, then

$$I = E\left\{\frac{1}{R} + j\left(Cp - \frac{1}{Lp}\right)\right\} \quad \ldots \quad \ldots \quad \text{(i)}$$

Now writing $p = (p_0 + \omega)$, where $p_0 = \frac{1}{\sqrt{LC}}$ and

www.americanradiohistory.com

$\frac{\omega}{p_0}$ is small, we have, in the vicinity of resonance,

$$Cp - \frac{1}{Lp} = C(p_0 + \omega)\left(1 - \frac{1}{CL(p_0 + \omega)^2}\right)$$

$$= C(p_0 + \omega)\left(1 - \frac{1}{\left(1 + \frac{\omega}{p_0}\right)^2}\right)$$

whence, expanding $\left(1 + \frac{\omega}{p_0}\right)^{-2}$ and neglecting second order terms,

$$Cp - \frac{1}{Lp} = 2C\omega.$$

Therefore from (i)

$$I = \frac{E}{R}(1 + jT\omega) \text{ where } T = 2RC$$

or alternatively :—

$$E = \frac{RI}{1 + jT\omega}$$

whence

$$e = \frac{R\hat{\imath}\sin\{(p_0 + \omega)t - \theta\}}{\sqrt{1 + T^2\omega^2}} = \hat{e}\sin(pt - \theta) \quad .. \quad \text{(ii)}$$

where $\theta = \text{arc tan } T\omega$.

and $\hat{e} = \frac{R\hat{\imath}}{\sqrt{1 + T^2\omega^2}}$

APPENDIX 2

Suppose now that a modulated R.F. current replaces the steady R.F. current in appendix 1, we then have

$$i = \hat{\imath}(1 + K\cos\omega t)\sin p_0 t$$

p_0 being written for p to indicate that the circuit is supposed tuned to the carrier wave.

Expanding, we have

$$i = \hat{\imath}\sin p_0 t + \frac{\hat{\imath}K}{2}\sin(p_0 + \omega)t + \frac{\hat{\imath}K}{2}\sin(p_0 - \omega)t.$$

There are thus three sinusoids of current applied to the circuit, each giving rise to an independent sinusoidal p.d. across the condenser.

Whence, applying equation (ii), appendix 1, to each term of the above equation in turn, the total condenser p.d. is

$$e = R\hat{\imath}\sin p_0 t + \frac{R\hat{\imath}K}{2\sqrt{1 + T^2\omega^2}}\sin\{(p_0 + \omega)t - \theta\}$$

$$+ \frac{R\hat{\imath}K}{2\sqrt{1 + T^2\omega^2}}\{\sin(p_0 - \omega)t + \theta\}$$

$$= R\hat{\imath}\left(1 + \frac{K}{\sqrt{1 + T^2\omega^2}}\cos(\omega t - \theta)\right)\sin p_0 t \quad .. \quad \text{(i)}$$

where $\theta = \text{arc tan } T\omega$.

APPENDIX 3

Fig. 5 represents a typical diode rectifier to which a modulated wave is applied. The rectified output voltage, freed from components of frequency $\geqslant \frac{p}{2\pi}$, is given by v.

It has been shown in an earlier paper[1], that under certain conditions v is very nearly equal to the peak input voltage, i.e.,

$$v = a\hat{e}(1 + K\cos\omega t) \quad .. \quad .. \quad .. \quad \text{(i)}$$

where a approaches unity and is sensibly constant.

It was also shown in that paper that when the source of supply is of zero impedance, or is a resonant circuit tuned to the input frequency, then the important component of current drawn from the source is

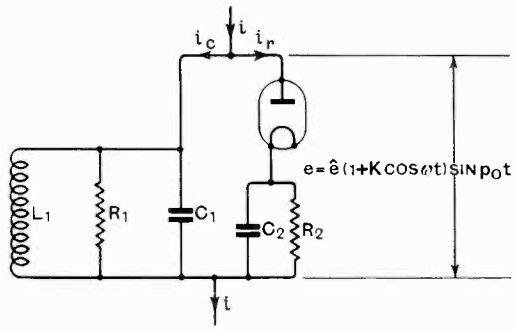

Fig. 6.

$$i_r = 2\left(\frac{v}{R_2} + C_2\frac{dv}{dt}\right)\sin pt$$

whence from (i)

$$i_r = 2\left(a\hat{e}\frac{(1 + K\cos\omega t)}{R_2} - a\hat{e}C_2\omega K\sin\omega t\right)\sin pt \quad .. \quad \text{(ii)}$$

$$= \frac{2a\hat{e}}{R_2}\left(1 + K\sqrt{1 + T_2^2\omega^2}\cos(\omega t + \theta)\right)\sin pt \quad .. \quad \text{(iii)}$$

where $T_2 = R_2C_2$ and $\tan\theta = T_2\omega$.

Suppose now that a rectifier is connected across a resonant circuit, the combination being supplied with a current i such that there appears across the combination a p.d.

$$e = \hat{e}(1 + K\cos\omega t)\sin p_0 t.$$

Conditions are then as shown in Fig. 6.

If i_r and i_c are the currents entering the rectifier and the circuit respectively then, by inverting the process of appendix 2,

$$i_c = \frac{\hat{e}}{R_1}\left(1 + K\sqrt{1 + T_1^2\omega^2}\cos(\omega t + \text{arc tan } T_1\omega)\right)\sin p_0 t \quad .. \quad .. \quad \text{(iv)}$$

$$= \hat{e}\left(\frac{1}{R_1} + \frac{K\cos\omega t}{R_1} - 2C_1\omega K\sin\omega t\right)\sin p_0 t.$$

Also from equation (ii) above

$$i_r = \hat{e}\left(\frac{2a}{R_2} + \frac{2aK\cos\omega t}{R_2} - 2aC_2\omega K\sin\omega t\right)\sin p_0 t.$$

www.americanradiohistory.com

But

$$i = i_c + i_r = e\left\{\left(\frac{1}{R_1} + \frac{2a}{R_2}\right) + K\left(\frac{1}{R_1} + \frac{2a}{R_2}\right)\cos\omega t - (2C_1 + 2aC_2)\omega K \sin\omega t\right\}\sin p_0 t$$

$$= e\left(\frac{1}{R_1} + \frac{2a}{R_2}\right)\left\{1 + K\sqrt{1 + T_3^2\omega^2}\cos(\omega t + \theta_3)\right\}\sin p_0 t \quad \ldots \quad \ldots \quad \text{(v)}$$

where $\tan\theta_3 = T_3\omega$

$$\text{and} \quad T_3 = \frac{2C_1 + 2aC_2}{\frac{1}{R_1} + \frac{2a}{R_2}} = 2R_1C_1\left(\frac{1 + \frac{aC_2}{C_1}}{1 + \frac{2aR_1}{R_2}}\right) = \alpha T_1$$

$$\text{where } \alpha = \frac{1 + \frac{aC_2}{C_1}}{1 + 2aR_1/R_2} \text{ (equation (1) of text).}$$

It follows from (v) that if the combination were supplied with a current $i = \hat{i}(1 + K\cos\omega t)\sin p_0 t$ there would result an output p.d. across C_1 given by

$$e = \frac{\hat{i}}{\frac{1}{R_1} + \frac{2a}{R_2}}\left\{1 + \frac{K}{\sqrt{1 + T_3^2\omega^2}}\cos(\omega t - \theta_3)\right\}\sin p_0 t$$

$$= \left\{1 + \frac{K}{\sqrt{1 + \alpha^2 T_1^2\omega^2}}\cos(\omega t - \text{arc}\tan\alpha T_1\omega)\right\} \times \beta R_1\hat{i}\sin p_0 t \quad \ldots \quad \ldots \quad \ldots \quad \ldots \quad \text{(vi)}$$

$$\text{where } \beta = \frac{1}{1 + \frac{2aR_1}{R_2}} \text{ (equation (2) of text).}$$

BIBLIOGRAPHY

(1) F. C. Williams. *Wireless Engineer*, 1937, Vol. 14, No. 167, p. 403.

(2) F. E. Terman and N. R. Morgan. *Proc. Inst. Rad. Eng.*, 1930, Vol. 18, p. 2160.

(3) J. R. Nelson, *ibid.*, 1932, Vol. 20, p. 989.

(4) F. M. Colebrook. *Wireless Engineer*, 1935, Vol. 12, No. 143, p. 415.

(5) W. F. Cope. *ibid.*, 1935, Vol. 12, No. 144, p. 478.

(6) F. Roberts and F. C. Williams. *Journ. I.E.E.*, 1934, Vol. 75, p. 157.

Aircraft Radio.

By D. Hay Surgeoner, A.F.R.Ae.S. 151 pages, 54 Plates and 19 Figures. Sir Isaac Pitman and Sons, Ltd., 39, Parker Street, London, W.C.2. Price 12s. 6d.

In the preface to this book the author says that he has "endeavoured to give not the purely theoretical aspect of the subject, but rather a practical indication of the extent to which radio is at present applied to the service of aviation . . ." etc. The result illustrates the great difficulty of describing this branch of wireless telegraphy without the aid of a single circuit diagram.

The chapter "Control of Radio Networks and International Regulations" is extremely informative but Chapter 3 on "Allocation of Wave Lengths and Wave Characteristics" seems, as soon as it begins to deal with short wave propagation, to rely upon a compressed technical style that can only be clearly understood if one is already familiar with the subject, and this applies to much of the remainder of the book.

The directive properties of the frame aerial, the A/N interlocked equi-signal course, switched cardioids for aircraft homing apparatus and Busignies diphased generator type of direct reading D.F. are examples of the many subjects that are described without diagrams. In spite of this fault, there is much to be learned from the book and Chapter 5 on "Directional Systems" gives, in ten pages, a useful survey of the systems and of their organisation for aircraft navigation.

In introducing "Approach and Landing Systems," the author rather naïvely states that "it is necessary that the pilot be advised of the proper course to follow so that he shall clear obstructions such as buildings or trees, that might otherwise impede his progress and tend to spoil a good landing." Later, although glossing over the grave difficulties of providing safe vertical guidance, this chapter gives accounts of the U.S. Bureau of Standards and the Lorenz systems and there are some diagrams of the latter.

A long chapter called "Communications, D.F. Equipment and Operation" is an uneven mixture of valuable and less useful data and gives the impression of having been written independently of the earlier parts of the book—somewhat confirmed by the absence of any cross references. It contains for instance, a lengthy description of the Radio Compass and mentions its application to the Hegenberger Approach system which should surely have appeared in the Approach and Landing chapter. A large number of photographs of equipment are included here but as no circuit details are given, the views become a little tedious and there is evidence that the text has been taken, with insufficient editing, from material supplied by manufacturers. We are told in one case, for instance, that "It is interesting to note that 'night error,' which renders most direction-finders almost useless during certain hours, has no effect upon this equipment,"—with, however, the anticlimax—"when working with ordinary transmitters up to 45 miles away."

Chapter 8 on "Airport Equipment" includes transmitters, beacons, direction-finders and receiving equipment and is written with little regard to what has been said before, the principle of the D.F. being again explained crudely and less accurately than in Chapter 5. Plate XXV has letter references in the caption but not on the plate.

The concluding chapter on "Airport Lighting" gives a compact and readable account of this subject with well-chosen illustrations.

Parts of the book are exceedingly well informed and the whole of it will be read with interest and some profit so that it is the more a matter for regret that the technical radio sections have been, on the whole, poorly presented.

The price of 12s. 6d. seems high for 151 pages, even although they are large ones, 7½in. × 10in. There is no index. R. K.

www.americanradiohistory.com

Ultra-Short and Decimetre-Wave Valves*

Deflection of a Focussed Beam of Electrons as a Possible Basis for Construction

By F. M. Colebrook, B.Sc., A.C.G.I., D.I.C.

(Radio Department, National Physical Laboratory)

IN a recently published survey of the limitations of available types of thermionic valves† the writer has emphasised the fact that the control of an electron current by means of a grid traversed by it is subject to an inherent limitation in application to ultra-short waves arising from the fact that the transit time of an electron from filament to grid is an appreciable proportion of a period. The limitation is in the form of an absorption of power in the grid circuit, which is associated with, and due to, this transit time. For any given valve there will be a frequency at which the power absorbed in the grid circuit rises to equality with the obtainable output power. This is the frequency "ceiling" for the valve, and even at lower frequencies its effectiveness as an amplifier or oscillator is seriously degraded by the transit-time effect.

The acorn type of valve, of which the limitations and disadvantages need not be particularised, is probably representative of the best that can be done in the way of evading these limitations by reduction of transit time. It is a very wonderful technical achievement but cannot be regarded as a complete solution of the ultra-short-wave and decimetre-wave difficulty. It is clearly desirable to explore the possibilities of all available alternatives, and the present paper is written in the hope of stimulating research in this direction.

One obvious alternative to existing methods is to secure control of the electron current by forming it into a focussed beam as in a hard cathode-ray tube and directing it between electrodes to which the operative high-frequency voltage is applied, causing a periodic deflection of the beam. The beam thus controlled can, for example, be deflected to and fro between two suitable anodes, as shown in Fig. 1. If the anodes be connected by a resonant impedance, tapped at the centre to earth or a source of constant

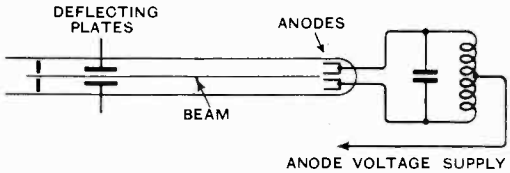

Fig. 1.

voltage, an alternating potential difference will be produced across its terminals. This can be passed on to a further such stage of amplification or transferred back in appropriate phase to the deflector plates for the generation of sustained oscillation.

Such a tube has been constructed, for preliminary experiments, by a commercial firm. The anodes in this case are in the form of semi-cylindrical buckets, this configuration having been adopted with a view to preventing the escape, from the interior anode space, of the secondary emission which will be produced in considerable amount from the impacted surfaces. The beam current is about 500 μA, with a "gun" voltage of about 2,000, and the beam can be transferred from one anode to the other by a potential difference of about ten volts across the deflecting plates, corresponding to an effective mutual conductance of about 0.05 mA/volt. The deflecting plates are about 0.7 cm. apart and

* MS. accepted by the Editor, September, 1937.

† "The Present Limitations and Future Possibilities of Voltage Amplification by Thermionic Valves," *Journ. Sci. Insts.*, Vol. 13, pp. 381–385.

www.americanradiohistory.com

4.5 cm. in length. The distance from plates to anodes is about 28 cm.

In this particular model there is an undesirably large capacitance, about 15 $\mu\mu$F, between the anodes, and it is therefore not suitable for ultra-short-wave operation. The possibility of the generation of oscillation, however, was confirmed by connecting an oscillatory circuit, tuned to about 50 metres, to the anodes and connecting the anodes back to the deflecting plates, when sustained oscillation was produced. The essential requirements of the mechanism, however, are (*a*) that the deflectional sensitivity is maintained at ultra-short wavelengths and (*b*) that the process of deflection does not, at ultra-short wavelengths, inherently involve the absorption of power to a prohibitive degree. These points have been investigated in a preliminary way, with satisfactory and promising results, which are further confirmed by the theoretical analysis given below.

The incidence of the focussed beam is made visible by fluorescence on the anode surfaces, and the deflection can therefore be observed. There was no evidence of any loss of deflectional sensitivity at wavelengths down to about 3 metres. This feature is, however, further discussed in the analysis.

An attempt was made to measure the effective input resistance of the deflector plates at wavelengths down to about 3 metres. It was estimated to be not less than 100,000 ohms. This includes a small loss due to stray electrons actually striking the deflector plates. The result is consistent with the approximate analysis given below.

We thus have experimental evidence that deflectional control may be free from the

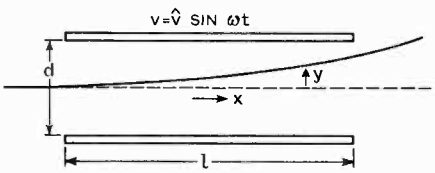

Fig. 2.—*Trajectory of electron through the deflecting field.*

ultra-short wave limitations of space-charge grid control, and the analysis supports this conclusion. This feature, taken in conjunction with a further suggestion which is outlined in the final section of this note, indicates that the possibilities of this mechanism are well worth exploring in relation to ultra-short and decimetre-wave operation.

Approximate Analysis of Deflection of Electron-beam

The subject of analysis is shown in Fig. 2. A beam of electrons, regarded as a line-density of charge, has a constant velocity u in the direction of x. A voltage $v = \hat{v} \sin \omega t$ is applied to the deflecting plates, giving an electric field $e = \hat{e} \sin \omega t$ which is assumed uniform and equal to v/d, in the direction of y, throughout the space between the plates.

For an electron which enters the field at the instant t_0 we have

$$\frac{d^2y}{dt^2} = e\frac{q}{m}$$

and

$$x = u(t - t_0)$$

where q and m are respectively the charge and mass of an electron.

By the integration of these equations we obtain, for the lateral displacement and lateral velocity, at emergence from the deflecting plates, of an electron which enters the plates at the instant t_0

$$y = \frac{\hat{e}}{\omega^2}\frac{q}{m}\{(1 - \cos \omega\tau) \sin \omega t_0 + (\omega\tau - \sin \omega\tau) \cos \omega t_0\}$$

and

$$\frac{dy}{dt} = \frac{2\hat{e}}{\omega}\frac{q}{m} \sin\frac{\omega\tau}{2} \sin\left(\omega t_0 + \frac{\omega\tau}{2}\right)$$

where $\tau = l/u$ is the transit time through the plates, and $\omega\tau$ is the angle usually referred to as the "transit angle."

The calculation of the input power supplied to the deflecting plates is a matter of some difficulty. The power supplied to the individual electrons in their transit through the space between the plates, in which space the field is assumed to be uniform, can be determined quite simply. The work done on an individual electron in its transit through this space is

$$w = \int_{x=0}^{x=l} eq\, dy$$

$$= \int_{t_0}^{t_0+\tau} eq \frac{dy}{dt}\, dt$$

www.americanradiohistory.com

If the beam current is I, the number of electrons entering the field per second is I/q, and the mean rate of working in the period t_0 to $t_0 + T$ is

$$P = \frac{1}{T}\int_{t_0}^{t_0+T} w\frac{I}{q}\,dt_0$$

By carrying out these integrations we obtain

$$P = \hat{e}^2\frac{q}{m}\frac{I}{2\omega^2}(1 - \cos\omega\tau)$$

and the equivalent input shunt resistance R is given by

$$R = \frac{\omega^2 d^2}{I}\frac{m}{q}\frac{1}{1 - \cos\omega\tau}$$

Formulae equivalent to the above appear in an article by H. E. Hollman and A. Thoma published in the issues of *Hochfrequenztechnik und Elektroakustik* for April and May, 1937, and are discussed and criticised by F. W. Grundlach in the issue of the same journal for August, 1937. The writer is indebted to Dr. R. W. Sloane, of the General Electric Company, with whom this subject was discussed, for calling attention to these publications and to the limitations of the above method of calculation of input power.

The above formula for R has a finite limiting value when ω tends to zero. In fact,

$$\underset{\omega \to 0}{Lt}\,.\,R = \frac{d^2}{I\tau^2}\frac{m}{q}\frac{\omega^2\tau^2}{1 - \cos\omega\tau}$$

$$= \frac{2d^2}{I\tau^2}\frac{m}{q}$$

In practice, there cannot be any sustained supply of power to the deflecting plates under these static conditions, for this would imply a flow of current to the plates from the battery which maintains the potential difference between them and a consequent continuous accumulation of charge on the plates. Since, therefore, there is no continuous supply of energy to the beam, the final steady velocity of the electrons must be the same as the initial velocity, and the transverse velocity (dy/dt) which the electrons have acquired on emergence from the field must be balanced out by a corresponding decrease of the longitudinal velocity dx/dt.

As Grundlach points out, an examination of the probable form of the equipotentials of the deflector-plate system will show how such retardation is likely to occur. There is no doubt that energy is imparted to the beam by the field between the plates during the transit through the sensibly uniform field between the plates. There must, therefore, in the static case and at low frequencies, be a return of energy to the plates in the subsequent history of the beam. On the other hand, experimental evidence suggests that there is, in fact, some absorption of power by the plates at very high frequencies. The matter awaits a more complete analysis in which the complete form of the equipotentials in the whole space concerned is taken into account. For the present it may perhaps be inferred that at high frequencies the complete return of the power from the beam to the plates is prevented by time considerations analogous to those which result in an absorption of power by a negative grid in the case of ordinary valves at very high frequencies. If this is so, the input power calculated as above may perhaps be regarded as an upper limit. It appears, however, that even this upper limiting value is such as to suggest that the control of current by the deflection of a beam is likely to be associated with a much smaller absorption of input power than in the case of control by a grid traversed by the electron-stream.

For example, in the model already referred to

$d = 0.7$ cm.
$l = 4.5$ cm.
$I = 300 \times 10^{-6}$ amps, when $u = 2.7 \times 10^9$ cm/sec.
$\tau = 1.7 \times 10^{-9}$ sec.

The input resistance, determined as above, is given by

$$R = 9.22 \times 10^{-13}\frac{\omega^2}{1 - \cos\omega\tau}\ \text{ohms.}$$

Thus, at a wavelength of 3 metres

$$R = 740{,}000 \text{ ohms.}$$

It is, as shown, inversely proportional to current, but even with a beam of, say, 10 mA, R would be not less than about 23,000 ohms. For a grid-controlled tube of ordinary dimensions, the corresponding figure would be not more than one or two thousand ohms, and there is therefore some

www.americanradiohistory.com

reason to suggest that deflectional control should show at least a tenfold advantage in respect of input power absorption as compared with control by a space-charge grid.

Deflectional Sensitivity

The important displacement is that of the point of incidence of the beam in the plane of the anode or anodes. If L be the length of the beam beyond the end of the plates, the displacement Y at the anode plane is

$$Y = \left(y + L\frac{dy}{dx}\right)_{x=l}$$

and if L is large compared with d and l, as in the present model

$$Y \simeq L\frac{dy}{dx} \simeq L\frac{1}{u}\frac{dy}{dt}.$$

From the equation for dy/dt, we have, at the end of the deflecting plates

$$\frac{dy}{dx} = 2\hat{e}\frac{q}{m}\frac{1}{u}\frac{1}{\omega}\sin\frac{\omega\tau}{2}\sin\left(\omega t_0 + \frac{\omega\tau}{2}\right)$$

the amplitude of this as a function of t_0 being

$$\frac{dy}{dx} = 2\hat{e}\frac{q}{m}\frac{1}{u}\frac{1}{\omega}\sin\frac{\omega\tau}{2}.$$

It may be noted that if $\omega\tau$ is so small that

$$\sin\frac{\omega\tau}{2} \simeq \frac{\omega\tau}{2}$$

$$\frac{dy}{dx} = \hat{e}\frac{q}{m}\cdot\frac{1}{u}\cdot\tau$$

confirming that under these conditions the deflectional sensitivity of a hard cathode-ray tube is independent of frequency. For larger values of ω, the deflectional sensitivity will decrease as the frequency increases, but even when the transit time is half a period (i.e., at 1 metre wavelength in the present tube) the sensitivity will be two-thirds of the maximum value.

Suggested Method of Application of Deflectional Control

The experiments with the present model, and the analysis connected therewith, have shown that the electric deflection of a focussed beam of electrons offers a means of controlling an anode current which is free from the inherent frequency-limitation imposed by power-absorption on control by means of a space-charge grid and which may therefore be applicable even at decimetre wavelengths. In the present model, however, the effective mutual-conductance is very small and cannot readily be increased. Also, the form of anode adopted to avoid the effects of secondary emission will tend to give an undesirably large anode capacitance. It is suggested, therefore, as a line for further experiment, that the desired increase of mutual conductance be sought by combining the deflectional control of a focussed beam with the fullest possible utilisation of the secondary-emission liberated thereby from an anode having a high secondary-emission ratio. The technique of cumulative secondary-emission amplification has been described by Zworykin in the Journal of the *Institution of Electrical Engineers*, Vol. 79, pp. 1–10. If the efficacy of this mode of amplification is maintained at very high frequencies, a matter about which the paper is not very explicit, a combination of deflectional control with the technique of cumulative secondary-emission amplification, might offer possibilities of realising a very high effective mutual conductance without the prohibitive input-power absorption at ultra-short wavelengths of existing types of thermionic valve.

Acknowledgments

The author is indebted to Mr. P. Vigoureux of the Electricity Department of the National Physical Laboratory for consultation on the analytical side of the subject. The work has been carried out as part of the programme of the Radio Research Board, and this paper is published by permission of the Department of Scientific and Industrial Research.

Valve Handbook

STANDARD TELEPHONES & CABLES, LTD., Connaught House, Aldwych, London, W.C.2, have produced a new valve handbook. It is of the loose-leaf type and includes data on a very wide range of valves, including transmitting types. The handbook is priced at 7s. 6d. and a charge of 7s. 6d. a year is made for maintenance with new material.

www.americanradiohistory.com

Background Noise Produced by Valves and Circuits

By W. S. Percival, B.Sc., and W. L. Horwood, B.Sc.

(Concluded from page 137 of March issue.)

Test Results

IT should be noted that in cases where the results of tests on one valve only are given, tests have actually been conducted on other similar valves and have given substantially similar results.

Graph 1 shows the results of a number of tests on a diode. The ratio of the effective temperature to half the cathode temperature ($T_c/2$) is plotted, the latter temperature being that theoretically deduced for the condition of retardation. The cathode temperature has been taken as 1,000° K in all cases. Graph 1 may be compared with Graph 2(a), which shows the corresponding curves for a triode acting as a true diode, the anode and grid being strapped conductively. In both cases the temperature rises with current from an initial value slightly above $\frac{T_c}{2}$.

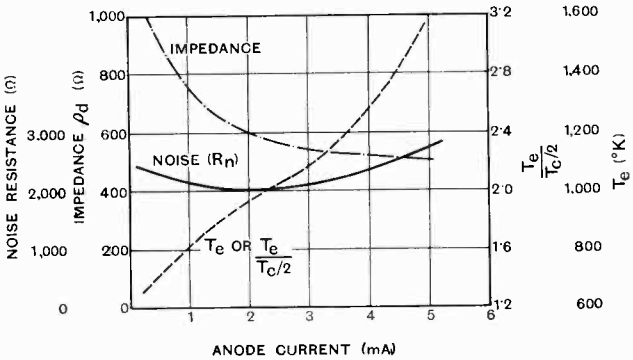

(Above) Graph 1. Test curves for D42.

(Right) Graph 2 (a). MH41 (No. 2) as Diode.

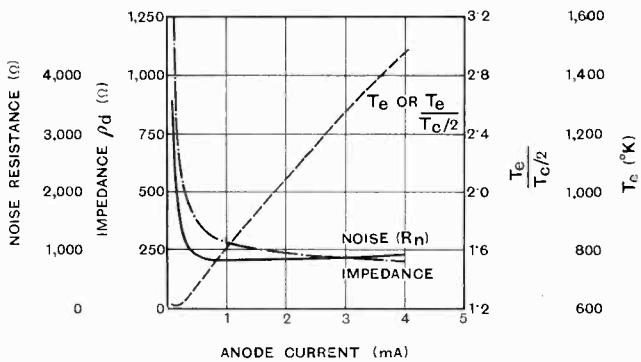

Graph 2(a) has been replotted to give Graph 2(b), in which values of anode voltage are the abscissae. This latter graph may be compared with Graph 3, which gives the results for the same valve tested as a triode. In Graph 3 it is to be noted that the effective temperature falls with increasing lumped voltage or increasing current, while in the test as a true diode the temperature rises with increasing anode voltage or increasing current. In both cases, however, the minimum temperature appears to be about the same and slightly greater than $T_c/2$. Tables I and II give further data for triodes. It can be seen that, for the valves tested, the effective temperature increases with increase of grid bias, whilst with increasing anode voltage the temperature first falls and then, near the maximum permissible voltage, rises slightly.

In Table III test results are given for a variety of triodes operating under normal conditions. Values for three MH41 valves are quoted showing that variations between valves of this type are remarkably small; measurements on larger batches also justify this conclusion.

www.americanradiohistory.com

The acorn test results indicate the great variability of these valves as regards noise. These variations were greatly reduced when for a given anode current the anode and bias voltages were reduced. The reduction of these voltages also decreased the actual noise values in all cases. The tests of these triodes as diodes showed that a valve which was good as a triode might be bad as a diode, and vice versa.

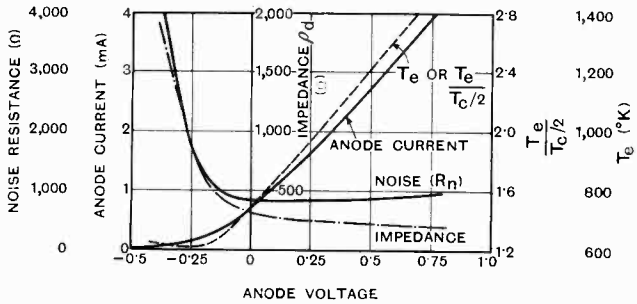

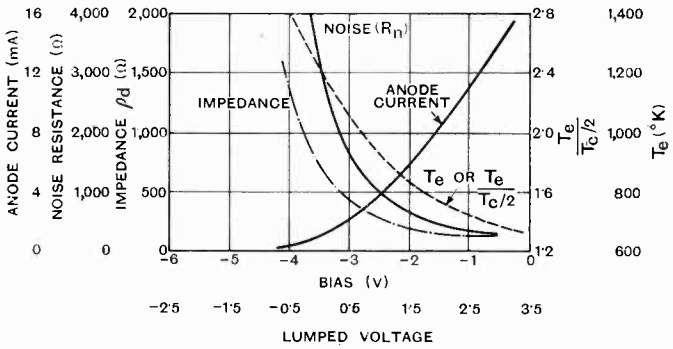

(Above) Graph 2 (b). MH41 (No. 2) as Diode.

(Left) Graph 3. MH41 (No. 2) Anode Voltage 280 V.

(Below) Graph 4. M.S.P.4 (No. 1) Anode voltage constant at 210 V. Bias constant at — 1.5 V.

Graphs 4, 5, and 6 and Tables IV, V and VI relate to multi-grid valves. In the case of these valves comparisons are given between the measured noise and that calculated from equation (16). In this comparison it is to be noted that the "triode noise," which would be produced by the electron stream in the absence of the screen and suppressor grids, is ignored. This does not greatly influence the results except in the case of the experimental beam valve E 819, in which the mutual conductance is very high. In Table VI allowance is made for the triode noise in the case of the E 819, and for purposes of comparison in the case of an MSP4. The triode noise was measured in terms of

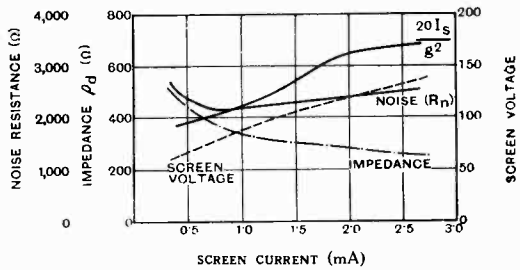

TABLE I.

M.H.41 (No. 2) TESTED WITH CONSTANT ANODE CURRENT OF 3 MA.

Anode Voltage.	Bias (V).	Noise Resistance $R_n(\Omega)$.	Impedance ρ_d, (Ω).	Effective Temp., T_e (° K).
100	0.2	600	220	790
200	1.7	970	270	1,040
300	2.8	1,430	320	1,300

TABLE II.

M.H.41 (No. 2) TESTED WITH CONSTANT BIAS OF — 1.4 V.

Anode Voltage.	Anode Current (mA.).	Noise Resistance R_n (Ω).	Impedance ρ_d (Ω).	Effective Temp., T_e (° K.).
100	0.6	3,500	750	1,350
150	1.9	7,150	330	1,020
200	4.25	700	213	950
300	10.5	500	145	1,000

www.americanradiohistory.com

an equivalent grid resistance by testing with the screen grid, suppressor grid and anode strapped capacitively but with their normal steady potentials applied. From these results it can be seen that the noise values to which equation (16) properly applies are in reasonable agreement with those calculated in both cases.

The large discrepancies between the actual

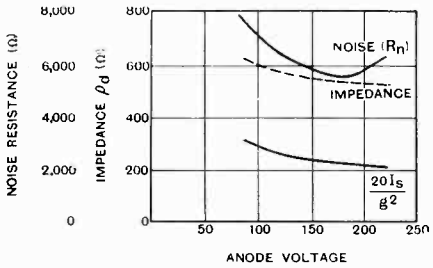

Graph 5. MS4B (No. 1) Screen voltage constant at 70 V. Bias constant at — 1.5 V.

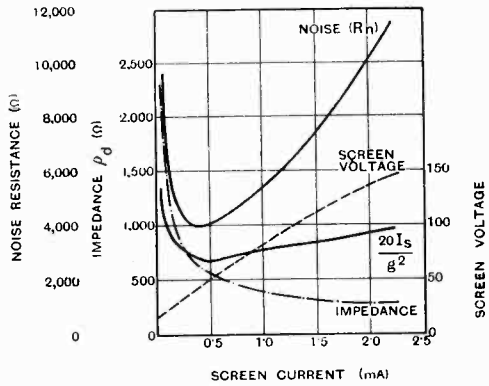

Graph 6. MS4B (No. 1) Anode voltage constant at 200 V. Bias constant at — 1.0 V.

and calculated noise values of Table V are presumed to be due to secondary emission.

Valve Noise Data at Various Frequencies.

It has already been mentioned that the results obtained at 450 kc/s and 2.5 Mc/s

TABLE III.

TRIODES.

Valve.	Ref. No.	Noise Resistance R_n (Ω).	Impedance, ρ_d, (Ω).	Effective Temp. T_e (° K).	$\frac{T_e}{T_c/2}$	Anode Voltage.	Anode Current (mA.).	Bias (V).
MH41	1	600	190	920	1.84	200	5.0	—1.0
	2	500	190	760	1.52	200	5.0	—1.4
	3	600	210	830	1.66	200	5.0	—1.1
ML4	1	750	240	890	1.78	190	20.0	—9.0
HA1 Acorn	1	7,000	570	3,550	7.1	140	3.25	—2.5
	2	2,300	440	1,500	3.0	140	4.5	—3.0
	3	1,470	400	1,050	2.0	140	4.5	—4.0
RCA 955 Acorn	1	1,650	410	1,170	2.3	180	4.5	—4.1
	2	1,750	450	1,130	2.3	180	4.5	—4.2
	3	6,550	480	3,950	8.0	180	4.5	—4.3
	4	2,270	450	1,470	2.9	180	4.5	—4.5
	5	3,580	450	2,300	4.6	180	4.5	—4.9
	6	1,620	400	1,170	2.3	180	4.5	—4.7
	7	6,450	470	4,000	8.0	180	4.5	—4.3
	1	1,270	380	970	2.0	80	4.5	—0.75
	3	1,690	360	1,360	2.7	80	4.5	—0.85
	6	990	350	820	1.6	80	4.5	—1.2
	7	1,550	—	—	—	80	4.5	—0.4
RCA 955 as diode	1	5,000	1,000	1,450	2.9	—	0.7	—
	1	7,900	1,000	2,300	4.6	—	1.2	—
	1	3,500	480	2,120	4.2	—	3.0	—
	3	2,090	630	960	2.0	—	0.6	—
	3	1,620	480	980	2.0	—	1.2	—
	3	1,390	370	1,090	2.0	—	3.2	—

www.americanradiohistory.com

TABLE IV.

Pentodes and Beam Valves.

(The asterisks denote experimental valves.)

Valve.	Ref. No.	Noise Resistance R_n (Ω).	Impedance, ρ_d (Ω).	$\frac{20\,I_s}{g^2}$ (Ω)	$R_n \div \frac{20\,I_s}{g^2}$	Anode Voltage.	Anode Current (mA).	Screen Voltage.	Screen Current (mA).	Bias (V).
MSP4	1	2,200	300	3,150	0.7	205	5.0	93	1.75	−1.5
MSP4	2	2,200	300	2,700	0.82	205	5.0	95	1.5	−1.4
MSP4	3	2,000	300	2,700	0.82	205	5.0	90	1.5	−1.4
*E489	1	2,400	270	2,340	1.02	200	6.5	100	1.6	−1 7
*E819	1	830	120	360	2.3	215	6.5	100	1.25	−1.7
E819	2	700	110	300	2.33	215	6.75	100	1.25	−1.7
RCA 954 Acorn Pentode	1	7,400	730	7,700	0.96	250	2.0	100	0.72	−2.2
	2	6,700	710	7,300	0.92	250	2.0	100	0.72	−2.25
	3	10,000	730	6,840	1.46	250	2.0	100	0.64	−3.0
	4	4,900	620	5,240	0.93	250	2.0	100	0.68	−2.4
	5	6,600	710	6,870	0.96	250	2.0	100	0.68	−2.8
	6	5,600	680	5,730	0.97	250	2.0	100	0.62	−2.4
	7	6,600	680	6,280	1.05	250	2.0	100	0.68	−2.6
	4	4,550	600	4,610	0.99	250	2.0	60	0.64	−0.8
RCA 954 as Tetrode	3	14,800	680	2,040	7.3	200	2.0	100	0.22	−3.7
	3	7,100	580	1,750	4.0	200	2.0	70	0.26	−1.9
	4	6,600	560	1,510	4.4	200	2.0	100	0.24	−2.9
	4	4,760	540	1,400	3.4	200	2.0	70	0.24	−1.8

TABLE V.

Tetrodes.

Valve.	Ref. No.	Noise Resistance R_n (Ω).	Impedance ρ_d (Ω).	$\frac{20\,I_s}{g^2}$ (Ω)	$R_n \div \frac{20\,I_s}{g^2}$	Anode Voltage.	Anode Current (mA).	Screen Voltage.	Screen Current (mA).	Bias (V).
MS4B	1	5,500	370	2,200	2.5	215	3.2	80	0.8	−1.0
	2	5,800	370	3,800	1.5	215	3.5	80	1.4	−1.0
	3	5,500	370	1,370	4.0	215	3.1	80	0.5	−1.0

TABLE VI.

Total Noise and "Triode Noise" of Pentodes and Beam Valves,

Valve.	Noise Resistance (Ω).				Impedance as Pentode ρ_d (Ω).	$\frac{20\,I_S}{g^2}$ (Ω)	$\frac{R_{NP}-R_{NT}}{\frac{20\,I_S}{g^2}}$	Anode Voltage.	Anode Current (mA).	Screen Voltage.	Screen Current (mA).	Bias (V).
	Ref. No.	As Pentode R_{NP}	As Triode R_{NT}	$R_{NP}-R_{NT}$								
E819	1	890	400	490	175	550	0.89	215	3.2	110	0.9	−1.5
	2	830	330	500	140	470	0.94	215	4.2	100	1.2	−1.5
MSP4	2	2,000	570	1,430	314	1,980	0.72	215	3.4	75	1.0	−1.2
	2	3,900	530	3,370	440	3,900	0.86	215	3.25	140	1.0	−3.0

www.americanradiohistory.com

are substantially the same. Table VII shows comparative results at 2.5 Mc/s and 45 Mc/s. The measurements at 45 Mc/s were obtained by arranging a frequency-changer stage to precede the noise amplifier already described, which was used to provide amplification at an intermediate frequency of 2.5 Mc/s. A tapped input circuit to the frequency changer was provided and the test circuit, suitably modified in view of the higher test frequency, was connected to an appropriate tap.

The conclusion to be drawn from the results of Table VII is that the noise resistances can be considered as practically the same at 2.5 Mc/s and 45 Mc/s. The different values obtained for MSP4's at the two frequencies may be mainly due to difficulties of measurement at the higher frequency.

Conclusions

Effect of Frequency.

The equivalent noise resistance does not alter to any important extent between 0.5 Mc/s and 45 Mc/s.

Diodes.

The effective temperature never falls below $\frac{T_c}{2}$ and rises rapidly with high currents.

Triodes.

The effective temperature, as previously defined, never falls below $\frac{T_c}{2}$, and with the valves tested was highest for high grid bias and low current values, falling off with increased anode voltage and reduced grid bias, but particularly with the latter. The equivalent resistance at room temperature never falls below $\frac{2}{g}$, and under working conditions may be as high as, say, $\frac{4}{g}$, or even higher for some Acorns.

It is curious that the effective temperature of a triode with plate and grid connected capacitively should be so near to that of a diode in the condition of retardation. The conditions are, however, materially different, since the triode has a space charge and the current is much larger than in the case of a diode.

Pentode and Tetrodes with Suppressed Secondary Emission.

The noise of these valves is partly due to ordinary triode noise and partly due to the random screen current. An empirical formula giving the order of the equivalent resistance is $\frac{3}{g} + \frac{20\,I_s}{g^2}$. If values greater than this are obtained, secondary emission may be suspected.

Effect of Secondary Emission.

In tetrodes and other valves in which secondary emission is not suppressed, there is an additional source of noise due to random secondary emission which is difficult to calculate, but which may be quite large.

Acknowledgments

The research was carried out in the Laboratories of the Electric and Musical Industries, Ltd., and acknowledgments are due to Mr. I. Shoenberg, Director of Research, and to Mr. G. E. Condliffe and the staff of the Research Department. In

TABLE VII.

COMPARISON OF RESULTS AT 45 Mc/s AND AT 2.5 Mc/s.

Valve.	Ref. No.	Noise Resistance $R_n(\Omega)$.		Anode Voltage.	Anode Current (mA).	Screen Voltage.	Screen Current (mA).	Bias (V).
		At 45 Mc/s.	At 2.5 Mc/s.					
MSP4	1	1,700	2,200	205	5	93	1.75	−1.5
	2	1,700	2,200	205	5	95	1.5	−1.4
	3	1,600	2,200	205	5	90	1.5	−1.4
MH41	1	600	600	200	5	—	—	−1.0
	2	500	500	200	5	—	—	−1.4
	3	500	600	200	5	—	—	−1.1

www.americanradiohistory.com

particular, thanks are due to Mr. A. D. Blumlein, who is responsible for pointing out the analogy between the noise of a diode and of a triode, and to Mr. C. S. Bull for equation (14).

APPENDIX

Calculation of the Correction Factor

In the method of test adopted, such a resistance is placed in parallel with the input resistance of the amplifier that the noise produced in the resultant resistance is equal to that produced when the valve under test, acting as a diode, is placed in parallel with the input resistance of the amplifier.

Let r_n be the value of the substituted resistance in ohms.

R the input resistance of the amplifier, in ohms.

ρ_d the resistance, in ohms, of the valve under test as a diode (for A.C.).

T_0 the temperature of r_n and R, in degrees absolute.

T_e the effective temperature of the valve, in degrees absolute.

It is first necessary to determine the noise produced by a resistance ρ_d at a temperature T_e, in parallel with a resistance R at temperature T_0.

The noise e.m.f. (ΔE_1), of ρ_d, is given by the equation

$$(\Delta E_1)^2 = 4k\,\rho_d\,T_e\Delta f \quad .. \quad .. \quad \text{(i)}$$

The p.d. (ΔV_1), produced across the resultant resistance by this e.m.f. is given by

$$(\Delta V_1)^2 = 4k\,\rho_d\,T_e\,\Delta f \times \left(\frac{R}{R+\rho_d}\right)^2 \quad .. \quad \text{(ii)}$$

Similarly the p.d. (ΔV_2), produced across the resultant resistance by the noise e.m.f. of R can be expressed

$$(\Delta V_2)^2 = 4k\,R\,T_0\Delta f \times \left(\frac{\rho_d}{R+\rho_d}\right)^2 \quad .. \quad \text{(iii)}$$

Now the square of the resultant p.d. across the resultant resistance is equal to the sum of the squares of the p.d.'s (ΔV_1) and (ΔV_2). Hence, if (ΔV_a) is the resultant p.d.,

$$(\Delta V_a)^2 = 4k\Delta f\left\{\rho_d\,T_e\left(\frac{R}{R+\rho_d}\right)^2 + RT_0\left(\frac{\rho_d}{R+\rho_d}\right)^2\right\} \quad .. \quad .. \quad \text{(iv)}$$

Equation (iv) therefore gives the resultant noise p.d. produced by the two resistances, at different temperatures, in parallel.

When the resistance r_n is substituted for the valve the resultant noise p.d. (ΔV_b) can be obtained by the usual method for resistances in parallel at the same temperature. This gives the expression

$$(\Delta V_b)^2 = 4k\left(\frac{Rr_n}{R+r_n}\right)T_0\Delta f \quad .. \quad .. \quad \text{(v)}$$

But by the method of test,

$$(\Delta V_a) = (\Delta V_b) \quad .. \quad .. \quad .. \quad \text{(vi)}$$

Hence from equations (iv) and (v)

$$\rho_d T_e\left(\frac{R}{R+\rho_d}\right)^2 + RT_0\left(\frac{\rho_d}{R+\rho_d}\right)^2 = T_0\left(\frac{Rr_n}{R+r_n}\right)$$

Whence

$$\rho_d T_e = T_0\left(\frac{R+\rho_d}{R}\right)^2\left\{\left(\frac{Rr_n}{R+r_n}\right) - R\left(\frac{\rho_d}{R+\rho_d}\right)^2\right\} \quad .. \quad .. \quad \text{(vii)}$$

Now from equation (13)

$$R_n = \frac{\rho_d T_e}{T_0} \quad .. \quad .. \quad .. \quad \text{(viii)}$$

∴ from equations (vii) and (viii)

$$R_n = \left(\frac{R+\rho_d}{R}\right)^2\left\{\left(\frac{Rr_n}{R+r_n}\right) - R\left(\frac{\rho_d}{R+\rho_d}\right)^2\right\}$$

$$= \frac{r_n\left(1+\frac{\rho_d}{R}\right)^2}{1+\frac{r_n}{R}} - \frac{\rho_d^2}{R} \quad .. \quad .. \quad .. \quad \text{(ix)}$$

The second term of the above expression is negligible compared with the first, and since $\frac{\rho_d}{R} \ll 1$

$$R_n \doteqdot r_n\frac{\left(1+\frac{2\rho_d}{R}\right)}{1+\frac{r_n}{R}} \quad .. \quad .. \quad \text{(x)}$$

The correcting factor (C.F.) by which r_n must be multiplied to obtain R_n is therefore given by the expression

$$\text{C.F.} = \frac{1+\frac{2\rho_d}{R}}{1+\frac{r_n}{R}} \quad .. \quad .. \quad .. \quad \text{(xi)}$$

BIBLIOGRAPHY

(1) W. Schottky, *Annalen der Physik*, 1918, Vol. 57, p. 541.

(2) J. B. Johnson, "Thermal Agitation of Electricity in Conductors," *Phys. Review*, 1928, Vol. 32, p. 97.

(3) H. Nyquist, "Thermal Agitation of Electric Charge in Conductors," *Phys. Review*, 1928, Vol. 32, p. 110.

(4) F. B. Llewellyn, "A Study of Noise in Vacuum Tubes and Attached Circuits," *Proc. Inst. Rad. Eng.*, 1930, Vol. 18, p. 243.

(5) E. B. Moullin and H. D. M. Ellis, "The Spontaneous Background Noise in Amplifiers due to Thermal Agitation and Shot Effects," *Jour. I.E.E.*, 1934, Vol. 74, p. 323.

(6) G. L. Pearson, "Shot Effect and Thermal Agitation in an Electron Current Limited by Space Charge," *Physics*, 1935, Vol. 6, p. 6.

(7) F. C. Williams, "Fluctuation Noise in Vacuum Tubes which are not Temperature Limited," *Jour. I.E.E.*, 1936, Vol. 78, p. 326.

(8) F. C. Williams, "Fluctuation Voltage in Diodes and in Multi-electrode Valves," *Jour. I.E.E.*, 1936, Vol. 79, p. 349.

(9) W. Schottky and E. Spenke, "The T/2-Law for the Fluctuations of Unsaturated Electron Currents," *Naturwiss*, 25th June, 1937, Vol. 25, p. 447.

www.americanradiohistory.com

Inductively Compensated Tetrode Amplifiers*

By D. M. Johnstone

(Baird Television Ltd.)

1. Introduction

As a means of compensating for the upper frequency attenuation due to the unavoidable shunt capacitance, the insertion of an inductance in the anode impedances of multi-stage tetrode amplifiers has found considerable favour by reason of the improved gain-distortion ratio obtainable as compared with other methods of compensation. Although the principle has been fully investigated as regards the degree of compensation possible, it is considered that the treatment given herewith, in which the response is defined completely in terms of a fundamental variable, which is a function of the pulsatance, the capacitance and the resistance component, and a parameter which is a function of the inductance-resistance ratio, has the advantage of indicating the limitations of the fundamental circuit of Fig. 1. The same method of analysis, applied to an amplifying circuit with alternate stages inductively compensated, enables by the addition of a further parameter in the expression for the response, the merits of the two methods to be compared.

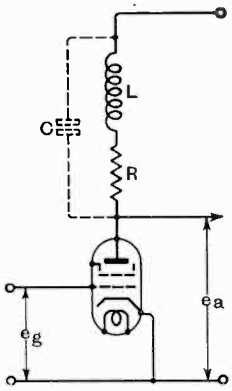

Fig. 1.—$e_a = e_g \cdot gZ_a = e_g \cdot gR$ *for zero frequency.*

2. Individual Stage Compensation

The stage amplification $A(\omega)$ for a tetrode of mutual conductance and anode circuit impedance Z_a is substantially given by $A(\omega) = gZ_a$ on the assumption that Z_a is very much smaller than the valve slope resistance. It follows that the amplification for the simplest form of inductively compensated anode circuit Fig. (1) in which

$$Z_a = R\frac{1 + j\omega\dfrac{L}{R}}{1 - \omega^2 LC + j\omega CR}$$

is

$$A(\omega) = gR\frac{1 + jk\alpha}{1 - k\alpha^2 + j\alpha} \quad .. \quad (1)$$

where $k = \dfrac{L}{CR^2}$ $\quad \alpha = \omega CR$

and L, C, and R are as shown in Fig. (1).

Since the amplification for the low frequencies, $A_0 = gR$ it follows that the response of a single stage is

$$P = \frac{A(\omega)}{A_0} = \frac{1 + jk\alpha}{1 - k\alpha^2 + j\alpha} \quad .. \quad (2a)$$

$$= |P|\, e^{j\theta}$$

$$\theta = \tan^{-1}\{(k - 1)\alpha - k^2\alpha^3\} \quad .. \quad (2b)$$

The frequency response is given by the modulus of the expression (2a)

$$|P| = \left\{\frac{1 + k^2\alpha^2}{1 + (1 - 2k)\alpha^2 + R^2\alpha^4}\right\} \quad .. \quad (3a)$$

$$= 1 + \tfrac{1}{2}(k^2 + 2k - 1)$$
$$\alpha^2 + \tfrac{1}{8}(3 - 12k + 6k^2 + 4k^2 - k^4)\alpha^4 \ldots .$$

by means of a binomial expansion valid for α and $k < 1$, a condition in keeping with practical limitations, since the response varies rapidly as α exceeds unity, whilst for values of k appreciably greater than unity, there will be a resonance peak in the range of α from 0 to 1.

From inspection of 3 (a) it is clear that the majority of the distortion for $\alpha < 1$ is due to the second power term in the series for $|P|$. The condition for the elimination of this term is found by equating its coefficient to zero, giving the result

$$k = 0.414 \text{ or } L = 0.414\, CR^2$$

* MS. accepted by the Editor, July, 1937.

www.americanradiohistory.com

This we may regard as the condition for minimum amplitude distortion. The amplitude and phase curves for this value of k are given in Fig. 2 (a).

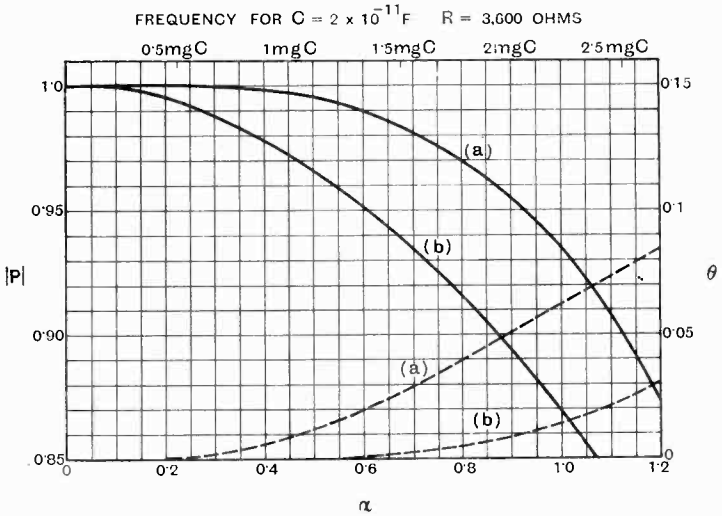

Fig. 2.

It is interesting to see how this value of k compares with that for minimum phase distortion. We obtain from the expression (2b) by Gregory's expansion

$$\theta = (k-1)\alpha - \left\{k^2 + \frac{(k-1)^3}{3}\right\}\alpha^3 + \left\{\frac{(k-1)^5}{5} - k^2(k-1)^2\right\}\alpha^5 \ldots .$$

so that the phase is the sum of a term linear in α plus terms in higher powers of α. The actual phase distortion θ' is the departure from phase linearity and is due to the third and higher power terms, the most important of which for $\alpha < 1$ is the cubic. By equating the co-efficient of this term to zero we obtain the value $k = 0.322$ for minimum phase distortion. Curves for this value of k are given in Fig. 2 (b). On comparing the latter with the curves for minimum amplitude distortion, it will be noticed that although the value $k = 0.322$ gives a phase negligible up to $\alpha = 1$ ($\theta = 0.014$ as compared with $\theta = 0.063$) for $k = 0.414$ the increased amplitude distortion (-0.13 as compared with -0.065) more than counterbalances the reduction in phase distortion. For small values the effect of phase distortion is equivalent to the addition to the signal of a small quadrature component of amplitude θ' since

$$\sin(\omega t + \theta') \doteqdot \sin \omega t + \theta' \cos \omega t \text{ for } \theta' \to 0.$$

Hence the total distortion can be regarded as the vector sum of two small components the one due to the amplitude distortion, the other to the phase distortion. The values of total distortion are for the minimum phase value of k, 0.134 and for the minimum amplitude value 0.091. Hence the latter condition can be taken approximately as the optimum for individual stage compensation.

3. Alternate Stage Compensation

One of the chief practical difficulties encountered with inductively compensated individual stages is a tendency for self-oscillation to occur even when screening is employed. For this reason it was considered worth while to investigate the circuit Fig. 3 which was found in practice, some

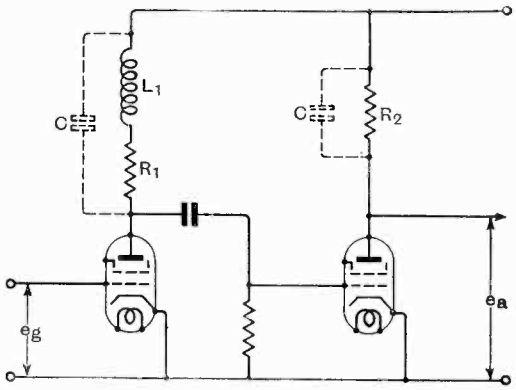

Fig. 3.—$e_a = e_g g^2 Z_a \cdot Z_{a2}$
$= e_g g^2 R_1 R_2 = g^2 n R_1 \cdot e_g$
for zero frequency.

considerable time ago, to reduce the tendency to instability, especially when the amplifier is in two stage sections. Essentially, it consists in applying inductive compensation in excess to alternate stages

www.americanradiohistory.com

in the amplifier chain so as to compensate not only for the inherent attenuation of the corrected stage, but also for that of the uncorrected stage. As the practical improvement in stability is considerable, it is of importance to determine if the method is theoretically capable of giving a response comparable with that obtainable with individually compensated stages.

The overall response is the product of the individual responses of the two stages of Fig. 3 and is given by

$$Q = \frac{1 + jm\beta}{1 - m\beta^2 + j\beta} \cdot \frac{1}{1 + jn\beta} \quad .. \quad (4)$$

where

$$\beta = \omega C R_1$$

$$m = \frac{L_1}{C R_1^2}$$

$$n = \frac{R_2}{R_1}$$

and R_1, R_2, L_1 and C are shown in Fig. 3.

It is assumed for the sake of simplicity that the capacitance per stage is identical. It will be noticed that as compared with the expression for individual stage compensation there are two arbitrary constants instead of one. The possibility arises, therefore, of eliminating both the first order distortion terms in the expansion in powers of β for the phase and frequency response. This we may determine as follows: For the frequency response we have—

$$|Q| = \left\{ \frac{1 + m^2\beta^2}{1 + (1 - 2m)\beta^2 + m^2\beta^4} \cdot \frac{1}{1 + n^2\beta^2} \right\}$$

$$= 1 + \tfrac{1}{2}(m^2 + 2m - 1 - n^2)\beta^2 \quad .. \quad (5a)$$

and for the phase

$$\phi = \tan^{-1}\{(m - 1)\beta - m^2\beta^2\} + \tan^{-1}(-n\beta)$$

$$= (m - n - 1)\beta - \tfrac{1}{3}\{3m^2 + (m - 1)^3 - n^3\}\beta^3 \quad .. \quad .. \quad (5b)$$

expanding as before.

The conditions for minimum distortion for $\beta < 1$ are that the coefficients of β^2 in (5a) and β^3 in (5b) shall be zero. We obtain, therefore, simultaneous equations for m and n.

$$m^2 + 2m - 1 = n^2 \quad .. \quad .. \quad (6a)$$

$$m^2 + \frac{(m - 1)^3}{3} = \frac{n^3}{3} \quad .. \quad .. \quad (6b)$$

Substituting different values for m in (6a) and (6b) by successive approximations we obtain the result

$$m = 1.05$$

$$n = 1.48$$

As would be expected, the value for m is higher than that for the similar parameter k with individual stage compensation, since

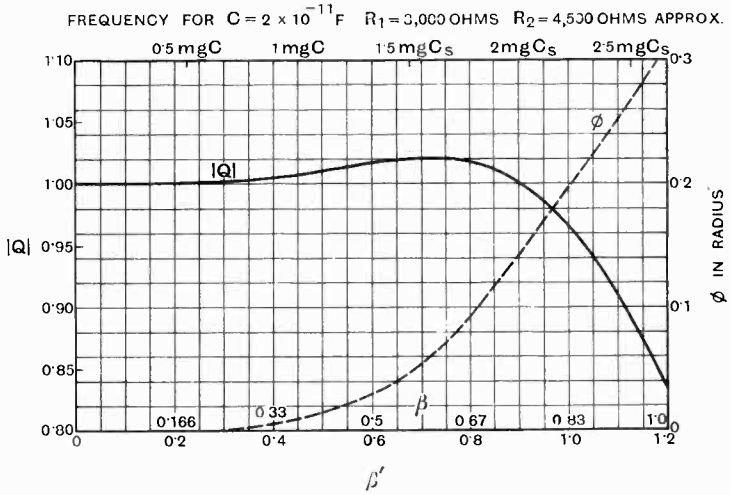

Fig. 4.

extra inductance is required to compensate for the loss in the uncorrected stage. Inserting these values for m and n in expressions (5a) and (5b) we obtain the curves for amplitude and phase distortion of Fig. 4. These are plotted for comparison with the curves for α against $\beta' = \beta\sqrt{n}$ which is the value of β giving equivalent gain per stage for the same value of α in the circuit of Fig. 1.

By comparison with Fig. 2 it is seen that for values of α and β' up to unity, amplitude distortion for the two stages of Fig. 2, is appreciably less than for one stage of Fig. 1, being for $\beta' = 1 - 0.034$ for the two stages, or approximately -0.017 per stage of the former, as compared with 0.065 per stage for $\alpha = 1$ of the latter. On the other hand, the phase distortion is slightly greater,

www.americanradiohistory.com

being 0.1 per stage for $\beta' = 1$ as compared with 0.063 for $\alpha = 1$.

For the lower values of α and β' the alternately compensated circuit has a practically identical phase distortion, and the amplitude distortion becomes negligible.

4. Conclusion

On comparison of two four-stage amplifiers, each with a total gain of 100 dB and a capacitance per stage of 2×10^{-11} F, the one using individual stage compensation with $k = 0.414$, $R = 3600$ ohms, the other alternate stage compensation with $R_1 = 3000$ ohms, $R_2 = 4500$ ohms, and the values of m and n above, we obtain theoretical values for the frequency attenuation of 2 Mc of approximately 0.13 for the former, and zero for the latter, and total distortions 0.2 and 0.21 respectively. If anything, therefore, the alternately compensated method is preferable, since for an almost identical total distortion it has the practical advantage of greater circuit simplicity and freedom from back coupling.

An obvious factor which has not been included in the analysis is the self capacitance of the inductances. This factor can, however, be made negligible by arranging so that the anode resistance is inductively wound to the required value, any small residual difference then being made up by the addition of a small extra resistance or inductance. With this arrangement the self capacitance is then merely additional to the main capacitance.

Correspondence

Letters of technical interest are always welcome. In publishing such communications the Editors do not necessarily endorse any technical or general statements that they may contain.

The Double Superheterodyne Receiver.

To the Editor, The Wireless Engineer

SIR,—My thanks are due to Mr. Kinross for his letter published in the December, 1937, issue of *The Wireless Engineer*.

Mr. Kinross and myself appear to be in accord as to the difficulties attached to the construction of double superheterodynes, but to differ as to the seriousness of these defects and the proper application of the D.S.H. principle.

In his article, published in *The Wireless Engineer* of July, 1937, Mr. Kinross states the "whole object" of the double-frequency superheterodyne is to "render available the principle of single-span tuning," and later states that the *raison d'être* of the double superheterodyne lies in the absence of switching.

The *raison d'être* for my use of the double superheterodyne is somewhat different, viz. :—

1. Stability allied with sensitivity.
2. Protection against second channel interference given by using a high first intermediate frequency.
3. Protection against adjacent channel interference given by using a low second intermediate frequency.
4. Convenience of a low second I.F. for variable selectivity refinements.
5. Convenience of high first I.F. for operating anti-static limiting devices.
6. Improvement in A.V.C. resulting from the use of a large number of controlled stages.
7. Convenience for automatic tuning arrangements.
8. Convenience in designing a receiver with large frequency range.

Our main points of difference beyond this lie in the selection of the first I.F

Mr. Kinross, judging from his letter, apparently prefers a very high frequency (5,155 kc/s) such as is required in a single-span receiver, for a receiver covering 550 to 1,500 kc/s while I prefer a frequency a little below the lowest frequency to be received, *i.e.*, about 530 kc/s for this purpose. Mr. Kinross objects to this frequency because of harmonic interference between the oscillators and sets out examples of such interference.

I object to the high frequency of 5,155 kc/s in such a receiver for the following reasons :—

I have designed several single-span receivers using an I.F. of 6,000 kc/s, for commercial use in ships, having a frequency range of 2,000 to 20 kc/s and find that the principal trouble encountered is due to the inherently poor selectivity of I.F. coupling units tuned to this frequency which enables them to pass to the second detector large potentials having the frequency of the first oscillator. Thus when receiving a frequency of say 150 kc/s with an I.F. of 6,000 kc/s the first oscillator is tuned to 6,150 kc/s and its output is applied with considerable amplitude to the second detector. When this is used for audio rectification, demodulation takes place, while if used for A.V.C. purposes, spurious A.V.C. and limiting potentials are produced. If this second detector is used as a frequency-changer overloading and harmonic interference is accentuated by the presence of first oscillator frequencies of great amplitude.

With regard to phantom signals in the arrangements shown in my specification, I think Mr. Kinross has erred in specifying them and also in stating that "they are by no means negligible even with careful screening."

Provided that screening and filtering is perfect, there will be present in the anode current of the mixing valves only frequencies as under :—

First frequency changer.	Second frequency changer.
f_0 and harmonics.	f_2 and harmonics.
f_1 and harmonics.	f_3 and harmonics.

Potentials of f_1 and its multiples reach the second

www.americanradiohistory.com

frequency-changer both due to poor screening and through the first I.F. coupling units. Screening, however, can be improved at little expense, but the adjacent-channel selectivity of circuits tuned to 5,000 or 6,000 kc/s cannot be improved without great expense. In order to obtain effective filtering and screening it is necessary to use filters having as low a frequency as possible.

With regard to the frequencies stated by Mr. Kinross to give rise to phantom signals in the receiver quoted these can be dealt with as follows :—

$$2f_2 = 1{,}060 \text{ kc/s} = f_3$$

In my specification I admit this source of phantom signal, which can only be overcome by most elaborate screening.

These phantoms can only occur when f_1 is present in the second frequency-changer.

Furthermore, it should be noted that in the absence of a signal of a corresponding frequency, these phantom signals do not produce any sound from the receiver and when receiving a signal the comparative amplitude of any whistles will be extremely small.

Thus, provided that screening and the selectivity of the first I.F. units are fair, very few whistles and phantom signals need be caused by the second frequency-changer. The first frequency-changer is a different matter. Here the level of the incoming signal is low and any suggestion of harmonic interaction is serious. Furthermore, the input circuits are usually of comparatively poor selectivity and almost impossible to screen, e.g., the aerial and tuning condensers introduce real screening problems. To make matters worse it is necessary to have a large amplitude in the first oscillator to reduce background noises and this accentuates whistles due to harmonics of the oscillator.

If the first I.F. is made very high the second oscillator (f_2) will also be high, thus causing the protection of screening to be defeated by leakage through stray capacities of the coupling units.

Still again, a high I.F. increases misalignment between signal and oscillator circuits in a ganged receiver, and thus further increases the serious nature of any whistles which may occur.

Using a second oscillator frequency a little lower than the lowest frequency to be received in a receiver for the 550 to 1,500 kc/s bank results in only one phantom signal, viz., that specified by Mr. Kinross as when $2f_2 = 1{,}060$ kc/s $= f_5$, i.e., due to twice the second oscillator frequency beating with the first frequency, and this can easily be located so that it lies exactly midway between two channels 10 kc/s apart, thus being practically unnoticeable. All other harmonics of the second oscillator fall outside the tuning range of the pre-selector stages and the difficulties caused by this single phantom fade into insignificance when compared with the difficulties set forth in Mr. Kinross's article. Thus, to achieve success with the D.S.H. principle, it is necessary to bear in mind all the points enumerated, and the second frequency changer must operate at a high signal level.

A very high I.F. is only justified for covering a large frequency range without switching and then the cost of effective filters may make it a doubtful economy, but the use of a double superheterodyne extends far beyond this object.

My suggestion re the use of the sum of frequencies instead of the difference is based on the difficulty of obtaining sufficient selectivity with a high I.F. to sufficiently attenuate the first oscillator frequency before it reaches the second oscillator. If a high I.F. is used in combination with the sum of the oscillator and signal frequencies, the ratio between I.F. and oscillator frequencies is greater than if the difference is used, e.g., given a signal of 5,000 kc/s and an I.F. of 6,000 we can use an oscillator of either 11,000 or 1,000 kc/s.

A filter tuned to 6,000 kc/s attenuates a frequency of 1,000 more than one of 11,000, while a 1,000 kc/s oscillator is more stable than one of 11,000.

Only a little ingenuity is required to so apply both upper and lower side bands, i.e., both sum and difference frequencies so as to entirely avoid harmonic problems and produce a single-span receiver of satisfactory design.

Mr. Kinross's solution of the aerial filter problem of the single-span receiver is most ingenious, but there is a simpler plan available using stock material to take advantage of the idiosyncrasies of superheterodyne reception which I may be at liberty to communicate at a later date.

E. G. BEARD,
Managing Director,
Ace Amplifiers Pty., Limited.

Cremorne, N.S.W.

(On account of the length of Mr. Beard's letter, a considerable portion has been omitted.—ED.)

Critical Distance Valves and Beam Tetrodes

To the Editor, The Wireless Engineer

SIR,—In the past few months many foreign technical publications describing critical distance tetrodes have appeared. These publications infer or even state that these valves originated abroad. It seems extremely unfair that an impression should be thus given to the world that this type of valve is not, as in fact it is, originally a British product.

I am, of course, not able to speak for other workers in this field, but would like to place the following facts on record.

(1) The "beam tetrode" and the "critical distance tetrode" are one and the same type of valve.

(2) In both cases the stream of electrons forms a well-defined beam from the cathode to the anode and the anode is placed at the critical anode distance.

(3) In 1932 I published in England the first description of the "critical distance" effect (Bib. I). A valve having the anode at the critical distance was first described in this publication. Means were provided to direct a beam of electrons into the desired direction. Two types of electron directing means were employed. In one type of valve the focusing action of the control grid was employed alone. In another, this focusing action was assisted by plates connected to the cathode and suitably disposed between the positive grid and the anode. The desirability of reducing the interception of the space current by the positive grid was pointed out.

(4) Many hundreds of valves of these types were made and tested in my laboratory between 1931 and the date of this publication.

www.americanradiohistory.com

(5) In August, 1935, critical distance power valves were first marketed by The High Vacuum Valve Company, of 111, Farringdon Road, E.C.1 (England). The valves were shown, and one was operated in comparison with a pentode, on the "Hivac" stand at Radiolympia that year.

(6) The now acknowledged advantages of the critical distance tetrode construction over that of the pentode were first pointed out in my articles in *The Wireless World* in 1935 and in *The Wireless Engineer* (Bib. 2).

(7) In the above-mentioned original publication, I also described the principle of what is now termed "reverse feed-back," and suggested its use with critical distance valves. I show circuits for feeding back a portion of the voltage across an anode load to a control grid or accelerating electrode for the purpose of reducing the effective anode impedance.

(8) No other critical distance valve or beam tetrode was, as far as I am aware, marketed until after the announcement of the 6L6 by the Radio Corporation of America in April, 1936 (Bib. 3). This is some years after the research work in this country and over a year after the first commercial use of the Hivac tetrodes. The only feature of the R.C.A. tube that did not previously exist in those already made in England was that of making both control grid and accelerating grid of the same pitch and with the wires aligned. This feature is not, of course, new to the valve art; but unquestionably reduces the screen current appreciably when applied to a critical distance valve.

(9) There is also a curious and persistent emphasis in many quarters (Bib. 4) upon an endeavour to explain the operation of the beam tetrode in terms of the usual space charge effect, such as that first described by Mr. E. W. B. Gill, in 1925 (Bib. 5). Certain properties of secondary radiation are studiously ignored. It may readily be shown that an electron space charge having the properties of those known prior to the date of my original publication in England is quite incapable of explaining the critical distance effect. It is not possible, for reasons of space, to set out this matter more fully in this letter; but it is hoped in the near future to publish a report prepared by the laboratories of this Company on the mechanism of the critical distance.

For the same reason it is not possible to deal in full with the history and origin of critical distance valves. This is a matter which will probably be dealt with elsewhere; but I hope that the above information will be of interest to your readers. This country is entitled to any credit there may be for the production of the now widely used critical distance "beam tetrode." American vision and American publicity have since popularised the valve. It is a strange thing that British industry so often refuses to progress until our cousins across the Atlantic have first gone ahead.

J. H. OWEN HARRIES,
(Director, Harries Thermionics Limited).

London, S.W.19.

BIBLIOGRAPHY

1. Harries, Brit. Pat. 380429, App. date March 10th, 1931.
Harries, Brit. Pat. 385968, App. date April 2nd, 1931.
2. Harries, *Wireless World*, August 2nd, 1935.
Harries, *Wireless Engineer*, April, 1936, Vol. 13, pp. 190-199.
Harries, *Wireless Engineer*, February, 1937, Vol. 14, pp. 63-72
3. Schade, *Electronics*, Vol. 9, No. 4, April, 1936, pp. 18-21.
4. Salzberg and Haeff, *R.C.A. Review*, Vol. II, No. 3, January, 1938, pp. 336-374.
Schade, *Proc. I.R.E.*, Vol. 26, No. 2, February, 1938, pp. 137-181.
5. Gill, *Phil. Mag.*, May, 1925, pp. 993-1005.
Tonks, *Phys. Rev.*, October, 1927, pp. 501-511.

Background Noise

To the Editor, The Wireless Engineer

SIR,—It was, of course, before the publication of my own views on the subject (see "A Theory of Fluctuation Noise," paper read before the Wireless Section of the I.E.E., 5th January, 1938) that Messrs. Percival and Horwood wrote their paper on "Background Noise Produced by Valves and Circuits" (*Wireless Engineer*, March, 1938, p. 128), and I suppose that in fact we must all have been working on the subject at about the same time. I am therefore rather concerned to find that the authors of this paper took for granted certain hypotheses which I consider are at least open to question, and certainly not valid without the most careful qualification.

1. *Space-Charge Limited Diodes.* The authors say that it can be shown that, if the sole effect of space-charge were the formation of a potential barrier, the effective temperature of the diode resistance would be the same as in the absence of space-charge. It would be interesting to know how this result is obtained and what the temperature is, since my own conclusions (*loc. cit.*) were that in the absence of space-charge the temperature is indeterminate, while in the presence of a potential barrier due to space-charge the effective temperature is approximately, but not exactly, equal to half the cathode temperature; and this is without considering the hypothesis of fluctuations of the potential barrier.

2. *Triodes.* The authors say, "However, it has been shown by Williams that the effective temperature of the valve resistance may be thousands of degrees absolute." This isolated quotation is, I think, hardly fair, for it does not mention the fact that Williams on the strength of such results, condemns the whole hypothesis of a "thermal" explanation of the fluctuation noise in both diodes and multi-electrode valves alike. But if the thermal theory is not indisputably established, does it not seem dangerous to build upon it the superstructure of a hypothesis that "in some way an amplifying valve magnifies the effective temperature," without any indication of the mechanism, or other supporting evidence? The present writer's view is that the additional noise in a multi-electrode valve is due to lack of complete space-charge limitation, such as would render possible a thermal interpretation, in the region between anode and the preceding electrode (i.e. control grid in a triode, screen grid in a tetrode).

3. *Screen Grid Valves.* If the current reaching the anode is in any case random, as the present writer believes (*loc. cit.*), can sharing with the screen in a four-electrode valve make it "more random"?

As seen at present, I fear that the method of measurement with anode joined to grid for A.C. will complicate rather than simplify theoretical interpretation, though it probably has advantages in the empirical classification of valves.

D. A. BELL.

Great Baddow,
Essex.

www.americanradiohistory.com

Abstracts and References

Compiled by the Radio Research Board and reproduced by arrangement with the Department of Scientific and Industrial Research

For the information of new readers it is pointed out that the length of an abstract is generally no indication of the importance of the work concerned. An important paper in English, in a journal likely to be readily accessible, may be dealt with by a square-bracketed addition to the title, while a paper of similar importance in German or Russian may be given a long abstract. In addition to these factors of difficulty of language and accessibility, the nature of the work has, of course, a great influence on the useful length of the abstract.

	PAGE
Propagation of Waves	214
Atmospherics and Atmospheric Electricity	216
Properties of Circuits	217
Transmission	218
Reception	220
Aerials and Aerial Systems	222
Valves and Thermionics	223
Directional Wireless	225
Acoustics and Audio-Frequencies	226
Phototelegraphy and Television	229
Measurements and Standards	231
Subsidiary Apparatus and Materials	234
Stations, Design and Operation	236
General Physical Articles	237
Miscellaneous	237

PROPAGATION OF WAVES

1279. THE PROPAGATION OF DECIMETRE AND CENTIMETRE WAVES ALONG SINGLE METALLIC AND DIELECTRIC WIRES AND IN HOLLOW CABLES WITHOUT RETURN WIRE [Concise Mathematical and Graphical Treatment on Lines of Early Work by Sommerfeld, Hondros, Debye, Zahn, and Schriever: "Main" Waves (with Attenuation decreasing with Increasing Conductivity) and "Subsidiary" Waves (High Attenuation, not decreased by Increasing Conductivity): etc.].—H. Awender & O. Lange. (*Funktech. Monatshefte*, Jan. 1938, No. 1, pp. 5–10.) For Part II, on the American researches, see *ibid.*, Feb. 1938, No. 2, pp. 51–56.

1280. ON THE PROPAGATION OF ULTRA-SHORT WAVES [7.5 and 5.0 m: Tests in and around Zurich: Effects of Diffraction and Scattering (Mountain Ranges with Sharp Ridges distribute Secondary Radiation, thus increasing Strength and Uniformity of Fields in Valleys behind Them): Subordinate Rôle of Polarisation State: etc.].—W. Gerber & F. Tank. (*Helvet. Phys. Acta*, Fasc. 5, Vol. 10, 1937, pp. 344–345: in German.)

1281. IONOSPHERIC INVESTIGATION USING LIMITING FREQUENCIES [of Propagation over Long Distances].—O. Burkard. (*Hochfztech. u. Elekzakus.*, Dec. 1937, Vol. 50, No. 6, pp. 185–189.)

The writer discusses the reception of signals on wavelengths of about 10 m, which is near the limiting wavelength for long-distance communication. Fig. 1 gives curves (in which the Lorentz polarisation term in the refractive index formula is taken as 1/3) dividing the (frequency, angle of incidence on E region) plane into regions of reflection and absorption for E, F_1, and F_2 regions respectively. Propagation at times of high and low solar activity is discussed in relation to observations of reception in Germany from distant stations and the probable degree of ionisation of the various ionospheric regions. Statistical treatment of the reception data leads the writer to the view that the value 1/3 for the Lorentz polarisation term is more probable than the value 0, "for which not only must the limiting frequency assume improbably high values, but the angle of emission must assume improbably low values."

1282. THE LORENTZ POLARISATION TERM AND THE EARTH'S MAGNETIC FIELD IN THE IONOSPHERE.—D. F. Martyn & G. H. Munro. (*Nature*, 22nd Jan. 1938, Vol. 141, pp. 159–161.)

The writers have experimentally identified a second ordinary echo from F region, occurring at frequencies slightly below the Larmor gyro-frequency, which becomes increasingly retarded and disappears at a certain frequency. This seems to give "definite proof that the Lorentz polarisation term is zero in the F region of the ionosphere." Accurate measurement of the disappearance frequency should provide a means of measuring the earth's magnetic field in the ionosphere.

1283. EFFECT OF A MAGNETIC FIELD ON THE ELECTRODELESS HIGH-FREQUENCY DISCHARGE [Presence of Field reduces Discharge Starting Potential at Low Pressures: Resonance Condition between Wavelength and Magnetic Field Strength: Application to Ionospheric Transmission and Energy Transference from Wave to Medium].—E. W. B. Gill. (*Nature*, 18th Dec. 1937, Vol. 140, p. 1061.)

1284. ANOMALOUS DIELECTRIC CONSTANT OF ARTIFICIAL IONOSPHERE [μ^2 can be Greater or Less than Unity, but Not So the Dielectric Constant].—Mitra & Roy. (*Nature*, 18th Dec. 1937, Vol. 140, p. 1066.) Correction to letter referred to in 24 of January.

www.americanradiohistory.com

1285. SUPPLEMENTARY NOTE TO THE PAPER: "THE PROPAGATION OF ELECTROMAGNETIC WAVES IN AN IONISED ATMOSPHERE" [Correction to Signs and Formula for Complex Refractive Index].—L. G. H. Huxley. (*Phil. Mag.*, Feb. 1938, Series 7, Vol. 25, No. 167, p. 388.) *See* 808 of March.

1286. PROPAGATION OF WAVE-PACKETS INCIDENT OBLIQUELY UPON A STRATIFIED DOUBLY-REFRACTING IONOSPHERE [Generalisation of Magneto-Ionic Theory].—K. G. Booker. (*Proc. Roy. Soc.*, Series A, 22nd Dec. 1937, Vol. 163, No. 915, pp. S 71–S 72: abstract only.)

1287. PENETRATION INTO POTENTIAL BARRIERS IN SEVERAL DIMENSIONS [Theoretical Inequalities assisting the Application of Wentzel/Brillouin/Kramers Method, for the Solution of Wave Problems in Regions of Slowly-Varying Imaginary Refractive Index, to More than One Dimension: Upper Limit for Probability of Penetration of Region].—P. L. Kapur & R. Peierls. (*Proc. Roy. Soc.*, Series A, 22nd Dec. 1937, Vol. 163, No. 915, pp. 606–610.)

1288. DISSOCIATION, RECOMBINATION, AND ATTACHMENT PROCESSES IN THE UPPER ATMOSPHERE: I [Theory using Quantum Mechanical Methods: Reconciliation of Recombination and Attachment Theories: Representation of Ionic Equilibrium in E Region].—H. S. W. Massey. (*Proc. Roy. Soc.*, Series A, 22nd Dec. 1937, Vol. 163, No. 915, pp. 542–553.) The full paper, an abstract of which was dealt with in 807 of March.

1289. IONOSPHERIC THEORY: PART I [Quantum-Mechanical Derivation].—R. C. Majumdar. (*Zeitschr. f. Physik*, No. 9/10, Vol. 107, 1937, pp. 599–622.)

The aim of this work is the development of a quantum theory of ionospheric phenomena. § 1: Mathematical formulation of fundamental equation for medium consisting of heavy particles and free electrons in periodic electric field and constant external magnetic field; tensor form of expressions for dispersion, absorption, conductivity, etc. § 2: Application of general formulae to ionospheric problems; formulae for dispersion, absorption, polarisation for constant collision frequency and for ionosphere consisting of electrons and ions. § 3: Discussion of ionospheric composition and temperature by comparison of observed and calculated values of reflection coefficient. Effect of magnetic field on electron motion in the ionosphere.

1290. HYPOTHESIS ON THE PHYSICAL STRUCTURE OF THE UPPER ATMOSPHERE [Probability of Special Conditions (Dissociation, Metastability) of Gases at These Heights: Calculation of Heights of Max. Ionisation of Helium & Atomic Hydrogen, Atomic Oxygen, and Metastable Nitrogen, giving Heights of F_2, F_1, and E Layers in accordance with Experimental Values].—A. Ciaccia. (*L'Elettrotec.*, Supplement A to Vol. 23, 1936: Fasc. 3, Electrical Communications (a) Radio Reception: pp. 260–263.) One of a number of papers on various subjects.

1291. DEMONSTRATION APPARATUS FOR WAVE THEORY TEACHING: GROUP AND PHASE VELOCITIES.—Greinacher. (*Helvet. Phys. Acta*, Fasc. 6, Vol. 10, 1937, pp. 490–494: in German.)

1292. FUTURE DX AND IONOSPHERE TRENDS.—G. Grammer. (*QST*, Feb. 1938, Vol. 22, No. 2, pp. 8 and 120, 122.)

1293. THE FREQUENCY SPECTRUM OF H.F. PULSES [in Relation to Interference produced].—Kotowski & Sonnenfeld. (*See* 1402.)

1294. FADING ON SHORT-WAVE SINGLE-SIDEBAND RADIO-TELEPHONY.—M. P. Dolukhanov. (*Izvestiya Elektroprom. Slab. Toka*, No. 10, 1937, pp. 1–9.)

The use of the theory of probability in determining distortion due to fading is discussed, and variations of amplitudes of two and three frequencies within the transmitted sideband are considered separately for the cases when the amplitudes vary independently from each other and when there is a certain correlation between these variations. The effect of automatic volume control at the receiver on amplitude distortion is also considered for cases when either the pilot signal, or the sideband, or both, are affected by fading.

The general conclusion reached is that the theory of probability affords means for determining in advance the distortion which is likely to occur and therefore the number of hours per day during which reliable communication can be established over a particular radio link.

1295. STATE OF THE IONOSPHERE DURING THE SOLAR ECLIPSE OF 8TH JUNE, 1937 [Bologna, 44° N: Minimum F_2 Ionisation about 100 Minutes before Middle of Eclipse].—I. Ranzi. (*Nuovo Cimento*, June, 1937, Vol. 14, No. 6, pp. 262–264.)

1296. AN EFFECT OF CATASTROPHIC IONOSPHERIC DISTURBANCES ON LOW-FREQUENCY RADIO WAVES [Anomalous Sunset Curve of Phase Lag of Downcoming Wave associated with Fade-Out, Increase in Atmospherics, or Magnetic Anomaly: Ionospheric Disturbance causes Decrease in Reflection Height].—K. G. Budden & J. A. Ratcliffe. (*Nature*, 18th Dec. 1937, Vol. 140, pp. 1060–1061.)

1297. IONOSPHERIC DISTURBANCES OF SUDDEN ONSET AND THEIR EFFECTS ON LONG WAVES [12–30 kc/s: Strengthening of Signals, occurring more frequently than Short-Wave Fade-Outs: Results for April 1937: Effects occurring more frequently in 1929/30 than in 1932/34].—R. Bureau. (*Comptes Rendus*, 31st Jan. 1938, Vol. 206, No. 5, pp. 360–362.)

1298. NEW DATA ON THE DELLINGER EFFECT [Comparison of Dellinger's 1936 Observations with 1936 German Records leads to Contradiction of Dellinger's Conclusion of Lower-Layer Action: Fade-Outs are due to Attenuation Increases, chiefly in F Region].—G. Leithäuser & B. Beckmann. (*Funktech. Monatshefte*, Jan. 1938, No. 1, pp. 1–4.)

www.americanradiohistory.com

1299. SHORT-WAVE FADE-OUTS [and Their Two Types: "Dellinger" (Excessive Absorption) and "Magnetic Storm" (Inadequate Ionisation for Refraction)].—(*Wireless World*, 10th Feb. 1938, Vol. 42, pp. 116–118.)

1300. "SUNSPOTS AND THEIR EFFECTS" [Book Review].—H. T. Stetson. (*Journ. Franklin Inst.*, Jan. 1938, Vol. 225, No. 1, pp. 113–114.)

1301. THE MAGNETIC STORM OF 25TH JAN. 1938 [Data of French Observations].—G. Gibault: C. Maurain. (*Comptes Rendus*, 31st Jan. 1938, Vol. 206, No. 5, pp. 357–358.)

1302. AURORA OF JANUARY 25/26 [Description of Appearance in Hertfordshire], *and* THE RECENT SUNSPOT AND MAGNETIC STORMS [Data: Storms January 16/22/25].—(*Nature*, 29th Jan. 1938, Vol. 141, p. 192: short notes.)

1303. THE AURORA OF JAN. 25/26 [Description of Appearances in England: Solar and Terrestrial Relationships in General: Characteristic Features of Aurorae].—(*Nature*, 5th Feb. 1938, Vol. 141, pp. 232–235.)

1304. DIVIDED AURORA RAYS WITH ONE PART IN THE SUNLIT AND ANOTHER IN THE DARK ATMOSPHERE [with Dark Space between Upper and Lower Parts of Rays].—C. Störmer. (*Nature*, 25th Dec. 1937, Vol. 140, pp. 1095–1096.)

1305. ALTITUDE EFFECTS IN THE RED PART OF THE AURORAL SPECTRUM AND THE TWO TYPES OF RED AURORAS.—L. Vegard. (*Nature*, 29th Jan. 1938, Vol. 141, p. 200.)

1306. ON THE POSITION OF THE AURORAL ZONE [and the Necessity for a Positive Accelerating Charge on the Earth].—D. Barbier. (*Journ. de Phys. et le Radium*, Dec. 1937, Vol. 8, No. 12, p. 512.) Supplementary to the work referred to in 3987 of 1937.

1307. A SURVEY OF THE FACTS AND THE THEORIES OF THE AURORA.—E. W. Hewson. (*Reviews of Mod. Phys.*, Oct. 1937, Vol. 9, No. 4, pp. 403–431.)

1308. THE PROPERTIES OF THE DIFFUSE LIGHT OF THE SKY [Spectrographic Records taken at 7099 and 9450 Metres: Discussion of Results].—I. A. Khvostikov. (*Comptes Rendus (Doklady) de l'Ac. des Sci. de l'URSS*, No. 4, Vol. 17, 1937, pp. 195–199: in French.)

1309. THE YELLOW RADIATION OF THE NIGHT SKY [may be due to Sodium].—J. Cabannes & J. Dufay. (*Comptes Rendus*, 24th Jan. 1938, Vol. 206, No. 4, pp. 221–224.)

1310. THE ABSORPTION SPECTRUM OF ATMOSPHERIC OZONE AND THE TEMPERATURE OF THE UPPER ATMOSPHERE.—G. Déjardin. (*Journ. de Phys. et le Radium*, Dec. 1937, Vol. 8, No. 12, Supp. pp. 150–151 S.)

1311. THE PRESENCE OF NITROGEN PENTOXIDE IN THE OZONE LAYER.—Adel & Lampland. (*Sci. News Letter*, 8th Jan. 1938, Vol. 33, p. 29.)

1312. THE ATTENUATION AND REFLECTION OF AN ELECTROMAGNETIC WAVE AT A FLAT CONDUCTING WALL, AS FUNCTIONS OF THE ANGLE OF INCIDENCE [Mathematical Treatment].—R. Bachstroem. (*T.F.T.*, Sept. 1937 Vol. 26, No. 9, pp. 209–212.) A final section deals with the calculation of the energy losses in the wall.

1313. PAPERS ON POWER-CURRENT EARTH RESISTANCES AND RADIAL EARTH SYSTEMS.—Hirt: Brown. (*See* 1422 & 1423.)

1314. STATIONARY OSCILLATION PHENOMENA ON LONG LEADS.—Grünwald. (*See* 1421).

1315. NATURE OF ELEMENTARY SOURCES OF LIGHT AND INTERFERENCE PHENOMENA [Notion that Spectra form Sole Distinction between Sources is true only for Newtonian, not for Fresnel, Interference: Importance of Spatial Radiation Distribution].—Wawilow. (*Comptes Rendus (Doklady) de l'Ac. des Sci. des l'URSS*, No. 9, Vol. 17, 1937, pp. 463–466: in English.)

1316. PAPERS ON OPTICAL INVESTIGATIONS ON THIN FILMS OF SILVER AND SILVER IODIDE [Method of determining Thickness from Polarisation Measurements: Measurement of Optical Constant].—Essers-Rheindorf: Försterling. (*Ann. der Physik*, Series 5, No. 4, Vol. 28, 1937, pp. 297–318: No. 8, Vol. 30, 1937, pp. 745–751.)

ATMOSPHERICS AND ATMOSPHERIC ELECTRICITY

1317. PROGRESSIVE LIGHTNING: V—A COMPARISON OF PHOTOGRAPHIC AND ELECTRICAL STUDIES OF THE DISCHARGE PROCESS [Negative Polarity of Discharges to Ground: These are Chief Cause of Atmospherics from Distant Thunderclouds].—B. F. J. Schonland D. B. Hodges, & H. Collens. (*Proc. Roy. Soc.*, Series A, 21st Jan. 1938, Vol. 164, No. 917, p. S14: abstract only.) Confirmation and extension of identifications of electric field changes made by Appleton & Chapman (1295 of 1937; *see* also 665 of 1935.)

1318. REGISTRATION OF ATMOSPHERICS AND PREDICTION OF STORMS [Notes on Registration on 1667 kc/s near Paris].—R. Failletaz. (*Comptes Rendus*, 24th Jan. 1938, Vol. 206, No. 4, pp. 270–271.) For previous work *see* 667 of 1935.

1319. SNOW STATIC DETECTOR FOR AIRCRAFT.—(*Communications*, Jan. 1938, Vol. 18, No. 1, p. 28.) *See* also 1644, below.

1320. THE ELECTRIC CHARGES ON SINGLE RAINDROPS AND SNOWFLAKES [Excess of Positively-Charged Drops and of Total Positive Charge: Average Charge per Drop, Sequences of Drops, etc: Discussion of Origin of Charges on Rain].—J. A. Chambers & F. Pasquill. (*Proc. Phys. Soc.*, 1st Jan. 1938, Vol. 50, Part 1, No. 277, pp. 1–15: Discussion pp. 15–16.)

www.americanradiohistory.com

1321. EXPLORATION OF THE ELECTRIC FIELD IN CLOUDS [General Account].—F. J. W. Whipple. (*Nature*, 22nd Jan. 1938, Vol. 141, pp. 143–145.) For detailed reference to the subject *see* Simpson & Scrase, 3605 of 1937.

1322. LIGHTNING STROKES [by Fundamental Electrostatic Theory, must be initiated within the Thundercloud].—J. Larmor. (*Nature*, 15th Jan. 1938, Vol. 141, p. 115.)

1323. THE BUILDING-UP TIME WITHIN THE DISCHARGE DELAY TIME [including Lightning Stroke Considerations: Survey], *and* THE STATISTICS OF THE DISCHARGE DELAY TIME IN AIR AT ATMOSPHERIC PRESSURE.—R. Strigel. (*E.T.Z.*, 6th Jan. 1938, Vol. 59, No. 1, pp. 1–7: 13th & 20th Jan. 1938, Nos. 2 & 3, pp. 33–37 & 60–62.)

1324. PHOTOGRAPHY OF LIGHTNING IN DAYTIME [Discharge takes Its Own Photograph: Triggering of Shutter worked by Train of Electromagnetic Pulsations from Stepped Leader which initiates Discharge].—B. F. J. Schonland. (*Nature*, 15th Jan. 1938, Vol. 141, p. 115.)

1325. BREAKDOWN AND VARIATION OF BREAKDOWN VOLTAGE [Theory including Dependence on Gamma Ionisation and Secondary Effects].—Rogowski & Wallraff. (*Zeitschr. f. Physik*, No. 1/2, Vol. 108, 1937, pp. 1–18.)

1326. REMARKS ON THE PAPER BY I. C. PURCARU: "CONTRIBUTION TO THE STUDY OF THE NATURE OF THE OSCILLATING SPARK DISCHARGE" [Points showing Lack of Experimental Accuracy].—A. Jonescu. (*Zeitschr. f. Physik*, No. 11/12, Vol. 107, 1937, p. 795.) For the paper in question *see* 966 of 1935.

1327. DISTORTION OF IMPULSE WAVE BY CORONA PHENOMENON [Theoretical Study].—H. Ogawa. (*Electrot. Journ.*, Tokyo, Jan. 1938, Vol. 2, No. 1, pp. 10–14.)

1328. THE TECHNIQUE OF WAVE FRONT RESEARCH.—F. H. Benedict. (*E.T.Z.*, 20th Jan. 1938, Vol. 59, No. 3, p. 74: summary only.)

1329. "TRANSIENT ELECTRIC CURRENTS."—H. Skilling. (At Patent Office Library, London: Cat. No. 78 287: 364 pp.)

1330. THE MOBILITY SPECTRUM OF HEAVY IONS [measured by Photographing Trajectories of Charged Particles in Alternating Electric Field.].—O. Te-Tchao. (*Comptes Rendus*, 24th Jan. 1938, Vol. 206, No. 4, pp. 240–242.)

1331. "COMPOSANTE DIURNE ET COMPOSANTE SEMI-DIURNE DU CHAMP ÉLECTRIQUE TERRESTRE" [Book Review].—R. Guizonnier. (*Rev. Gén. de l'Elec.*, 15th Jan. 1938, Vol. 43, No. 3, p. 66.)

1332. MAGNETIC STORM AND VARIATION OF COSMIC RAYS.—Clay & Bruins. (*Physica*, Feb. 1938, Vol. 5, No. 2, pp. 111–114: in English.)

1333. THE ESTABLISHMENT OF CHARTS OF THE ATMOSPHERE OVER THE NORTH ATLANTIC: THE METEOROLOGICAL SHIP "CARIMARÉ."—R. Bureau. (*Génie Civil*, 5th Feb. 1938, Vol. 112, No. 6, pp. 124–127.)

PROPERTIES OF CIRCUITS

1334. RESISTANCE BALANCING IN WAVE FILTERS.—G. Builder. (*Journ. Inst. Eng. Australia*, Dec. 1937, Vol. 9, No. 12, pp. 472–479.)

Author's summary:—Resistance balancing in wave filters to overcome the effect of dissipation losses was proposed by W. P. Mason with particular reference to lattice and bridged "T" filter sections employing piezoelectric crystals, and by H. W. Bode in reference to the balancing of losses at rejector frequencies in *m*-derived filter sections. An examination of the two methods indicates that their direct application is very limited; but Mason's method, considered in relation to filters designed after methods due to Cauer and Bode, and employing piezoelectric crystals, is an important contribution to filter design. These methods taken together should make it possible to approach closely to ideal filter characteristics ["since they provide means of overcoming the effects of dissipation in both pass and attenuating bands and the effects in the pass band of mis-matching to the terminations."]

1335. SYMMETRICAL, CAPACITATIVELY COUPLED BAND FILTERS OF ADJUSTABLE BAND WIDTH.—H. Frühauf. (*Hochf: tech. u. Elek: akus.*, Dec. 1937, Vol. 50, No. 6, pp. 197–200.)

Calculations based on the circuit of Fig. 4, in which two oscillating circuits are coupled capacitively, show that it is possible "to construct a band filter whose filter curve is symmetrical about the middle of the band and for which the frequency of this middle point does not change as the coupling is varied. The natural frequencies of the two circuits must be equal in the decoupled state, but the circuits can have different inductances, capacities and attenuation impedances." The half-value width of the filter curve is calculated.

1336. THE LEVELLING OF THE CHARACTERISTIC IMPEDANCE OF NETWORKS WITH LOSSES.—R. Feldtkeller. (*T.F.T.*, Dec. 1937, Vol. 26, No. 12, pp. 269–275.)

"It is shown how the losses in the coils and condensers limit the levelling of the characteristic impedance of a network. The characteristic impedance of the Zobel *m*-terminating network and the *m*-terminating network are represented by a power series and their course discussed with the help of examples."

1337. A NEW METHOD FOR THE AUTOMATIC REGULATION OF THE CHARACTERISTIC OF AN AUDIO-FREQUENCY FILTER.—M. V. Laufer. (*Izvestiya Elektroprom. Slab. Toka*, No. 11, 1937, pp. 36–39.)

The response of the ear to medium frequencies varies with the transmission level, and it is therefore desirable that a.f. filters used in radio broadcasting and sound-film work should also have their attenuation dependent on the transmission level. To meet this requirement a filter is here proposed consisting

www.americanradiohistory.com

of an attenuator followed by a transformer (Fig. 2). The operation of this filter is discussed and it is shown that while its attenuation of medium and high frequencies remains constant, the attenuation of low frequencies increases when the transmission level is raised. Methods are also indicated for designing a filter of this type.

1338. MIXED INDUCTIVE AND CAPACITIVE COUPLING OF RESONANT CIRCUITS TUNED TO WIDELY DIFFERENT FREQUENCIES.—G. Cocci. (*L'Elettrotec.*, Supplement A to Vol. 23, 1936: Fasc. 3, Electrical Communications (a) Radio Reception: pp. 264–267.) One of a large number of papers on various subjects connected with reception.

1339. CALCULATION OF NON-STATIONARY PROCESSES WITH THE AID OF FREQUENCY TRANSFORMATIONS, *and* GENERAL CALCULATION OF THE ATTENUATIONS OF FILTERS WITH THE AID OF FREQUENCY TRANSFORMATIONS.—T. Laurent. (*Ericsson Technics*, Nos. 3 & 4, 1937, pp. 59–84 & 87–103.) For earlier work on the writer's methods *see* 1313 of 1937.

1340. GRAPHICAL DETERMINATION OF IMPEDANCES IN PARALLEL.—Böning. (*Electronics*, Jan. 1938, Vol. 11, No. 1, p. 54.) Long summary of the German paper dealt with in 3629 of 1937.

1341. NEGATIVE TRANSCONDUCTANCE, FOR AMPLIFIERS & OSCILLATORS, BASED ON DECREASE OF ANODE CURRENT WITH INCREASING SPACE CURRENT OCCURRING WHEN SPACE-CHARGE-LIMITED VIRTUAL CATHODE IS FORMED IN GRID/ANODE REGION.—Salzberg & Haeff. (In paper dealt with in 1428, below.)

1342. NEGATIVE-FEEDBACK AMPLIFIERS [Survey].—L. Chrétien. (*L'Onde Élec.*, Jan. 1938, Vol. 18, No. 193, pp. 5–21: to be contd.)

1343. NEGATIVE FEEDBACK CIRCUITS WITH SPECIAL REFERENCE TO THE BROADCAST RECEIVER.—Brück. (*See* 1381.)

1344. THE AMPLIFICATION OF [H.F.] WIDE FREQUENCY BANDS [for Oscillographs, etc.].—Kleen. (*See* 1534.)

1345. THE CIRCLE DIAGRAM OF THE RESISTANCE [Resistance - Capacity - Coupled] AMPLIFIER [based on a Simple Relation between Amplification and Phase Displacement].—K. E. Müller. (*Bull. Assoc. suisse des Élec.*, No. 24, Vol. 28, 1937, pp. 623–625: in German.)

1346. DESIGN OF RESISTANCE-COUPLED AMPLIFIERS [Curves, etc., for "Reasonably Fast and Accurate Design"].—E. J. Rhoad. (*Communications*, Jan. 1938, Vol. 18, No. 1, pp. 11–13 and 23.)

1347. TIME DELAY IN RESISTANCE-CAPACITY CIRCUITS.—E. W. Kellogg & W. D. Phelps. (*Electronics*, Feb. 1938, Vol. 11, No. 2, pp. 26–29.) For previous work *see* 2100 of 1937: an error in sign in this paper is now corrected (p. 29).

1348. NON-LINEAR DISTORTIONS IN ASYMMETRICAL PUSH-PULL AMPLIFIERS.—R. Feldtkeller. (*T.F.T.*, Oct. 1937, Vol. 26, No. 10, pp. 210–226.)

1349. THE ACTION OF A CONDENSER IN PARALLEL WITH A SPARK GAP OR SIMILAR DEVICE.—P. Bunet. (*Rev. Gén. de l'Élec.*, 29th Jan. 1938, Vol. 43, No. 5, pp. 135–136.)

1350. VALVE CIRCUITS FOR THE GENERATION OF RECTANGULAR WAVE FORMS.—Mynall. (*See* 1523.)

1351. A THERMIONIC TRIGGER CIRCUIT.—Schmitt. (*See* 1603.)

TRANSMISSION

1352. A NEW SYSTEM OF MODULATION FOR MICRO-WAVES [Theoretical and Experimental Treatment of "Double-Modulation" System giving Frequency Modulation].—G. Nobile. (*Alta Frequenza*, Jan. 1938, Vol. 7, No. 1, pp. 29–56.)

For previous work *see* 934 of 1937. Author's summary:—"A new method of double modulation, particularly suitable for micro-waves, is studied: an i.f. oscillation is modulated in amplitude by the telephonic currents, and the voltage thus obtained, applied to the anodes of the oscillator valves, produces a pure frequency modulation of the micro-waves. Calculation shows that when suitable conditions are observed this modulation system gives rise to no distortion and has a very good efficiency. Tests of transmission and reception, carried out at ranges up to 10 km with the use of several transmitting dipoles and parabolic reflectors, have shown the perfect efficacy of the new modulation system, and in particular its simplicity and reliability." A final section deals with possible improvements: among other points, u.s.w. fading (due to interference with reflected waves) can easily be compensated for by AVC applied to the i.f. amplification at receiver.

1353. DISCUSSION ON THE PAPER BY HOLLMANN & THOMA ON THE "DYNAMICS OF TRANSVERSELY- AND LONGITUDINALLY - CONTROLLED ELECTRON BEAMS."—Brüche, Recknagel, Gundlach: Hollmann & Thoma. (*Hochf:tech. u. Elek:akus.*, Dec. 1937, Vol. 50, No. 6, pp. 203: 204–205: 205–206: 206.)

For the paper in question *see* 2914 of 1937. Here, Brüche & Recknagel give reasons for thinking that the fundamental theoretical bases of this work are unsound. Hollmann & Thoma admit errors in their treatment of the statical case but defend, with further calculations, their theory of the "ultra-dynamical" phenomena. Brüche, Gundlach & Recknagel point out an error in these calculations which gives rise to repetition of the result (which they find to be wrong) that the transversely-controlled electron beam delivers energy to the condenser through which it passes.

www.americanradiohistory.com

1354. PRODUCTION OF LARGE POWERS ON WAVELENGTHS OF THE ORDER OF A DECIMETRE [Transit-Time Reduction in Magnetrons by 8–12 Anodes in Pairs: Anodes connected at Their Ends to form Oscillatory Circuit: Efficiency 15% compared with 5% for Ordinary Type: 10 Watts Output on 16 cm, 6 Watts on 10 cm].—H. Gutton & S. Berline. (*Journ. de Phys. et le Radium*, Jan. 1938, Vol. 9, No. 1, Supp. pp. 10–11S.)

The permanent-magnet field was below 500 gauss and the working voltage was about 700 volts.

1355. WATER-COOLED FOUR-SLIT MAGNETRONS FOR DECIMETRE WAVES.—E. Ahrens. (*Hochf: tech. u. Elek:akus.*, Dec. 1937, Vol. 50, No. 6, pp. 181–182.)

A four-slit anode system for 25 cm wavelength is shown in Fig. 1 and the whole valve in Fig. 2. The two members of each pair of anode segments are connected by a curved stirrup; a larger stirrup connects the middle points of the smaller ones. This is held symmetrically by the hollow cooling supports. The oscillating circuit so formed determines the wavelength. Oscillations from 15 to 60 cm wavelength could be obtained by altering linearly the proportions of the anode system. The energy is led off through a Lecher system coupled capacitively to the two outer anode segments. The constructional and working data of some tubes are tabulated.

1356. AN OLD GENERATING VALVE AS [Ultra-] SHORT-WAVE TRANSMITTER AND RECEIVER [Historical Development of Split-Anode Magnetron: Conflicting Claims].—E. Habann. (*Lorenz-Berichte*, April/May 1937, No. 1/2, pp. 55–71.)

Hull magnetron entirely outside line of development: Okabe's 1928 split-anode tube same as Habann's 1925 patent: differing actions of true magnetron and split-anode magnetron—former not fully understood yet: "slanting" magnetron probably a split-anode tube in disguise: detailed mode of action of split-anode tube as generator and as receiver.

1357. THE FREQUENCY MODULATION OF A MAGNETRON.—G. Bozzi. (*L'Elettrotec.*, Supplement A to Vol. 23, 1936: Fasc. 3, Electrical Communications (a) Radio Reception: pp. 274–275.) One of a large number of papers on various subjects connected with reception.

1358. ULTRA-SHORT-WAVE TELEPHONE TRANSMITTERS [Selection of Valve: Type 30 *versus* Type 955: Danger of Frequency Modulation: etc.].—A. Binneweg, Jr. (*Communications*, Jan. 1938, Vol. 18, No. 1, pp. 21 and 39: diagram p. 20.)

1359. 50 TO 100 cm OSCILLATOR DESIGN [Micro-Wave Generator using Type 955 Acorn Valve: with Associated Lecher-Wire System].—A. Binneweg, Jr. (*Electronics*, Dec. 1937, Vol. 10, pp. 36 & 39.)

1360. A PLANE-ELECTRODE DEMOUNTABLE THERMIONIC TUBE USED AS A GENERATOR OF ULTRA-HIGH-FREQUENCY OSCILLATIONS.—W. A. Leyshon. (*Proc. Phys. Soc.*, 1st Jan. 1938, Vol. 50, Part 1, No. 277, pp. 146–148: demonstration.) *See* 2613 of 1936.

1361. ELECTRONIC OSCILLATIONS IN TRIODES [Experimental Results showing that Triodes with Unsupported Helicoidal Grid can produce Electronic Oscillations of Well-Defined Frequency and that there may be Several Characteristic Frequencies, connected with a Resonance-Like Phenomenon].—E. Pierret. (*Comptes Rendus*, 17th Jan. 1938, Vol. 206, No. 3, pp. 175–177.)

1362. THE FREQUENCY CONSTANCY OF TOURMALIN-CONTROLLED ULTRA-SHORT-WAVE TRANSMITTERS.—J. Heierle. (*Helvet. Phys. Acta*, Fasc. 5, Vol. 10, 1937, pp. 345–346: in German).

Measurements on the 200-watt-output 7.5 m tourmalin-controlled transmitter used in the propagation tests round Zurich (1280, above) showed that, if heterodyne reception is to be used, the transmitter must have a thermostat for the crystal unit (1°C change in the crystal temperature produced a variation of 1500 c/s, and in one hour's service the air around the crystal rose by 10°C), must be of very stable and massive construction, and must not be modulated in the first amplifier stage (the set had a crystal stage and four amplifier stages).

1363. FREQUENCY STABILITY OF DIFFERENTIAL NEGATIVE TRANSCONDUCTANCE OSCILLATORS OF RETARDING-FIELD TYPE.—A. Pinciroli. (*L'Elettrotec.*, No. 21, Vol. 24, 1937, p. 685: summary only.)

1364. NEGATIVE TRANSCONDUCTANCE PRODUCED BY SPACE-CHARGE-LIMITED VIRTUAL CATHODE.—Salzberg & Haeff. (*See* 1341.)

1365. AN ANALYSIS OF SELF-EXCITATION OF A PIEZO-DYNATRON OSCILLATOR.—A. G. K'yandski. (*Izvestiya Elektroprom. Slab. Toka*, No. 10, 1937, pp. 34–36.)

The operation of a dynatron oscillator is discussed (Colebrook circuit, Fig. 1) and conditions are determined for the self-excitation of two crystal-controlled dynatron oscillating circuits as proposed by MacKinnon (Fig. 3 & 5: 1933 Abstracts, p. 155).

1366. NEW CHARACTERISTICS OF PENTODE QUARTZ OSCILLATOR [Max. Power at Very Stable Frequency by Correct Choice of Grid Leak and of Screen-Grid Voltage].—N. Takagi & H. Nakase. (*Electrot. Journ.*, Tokyo, Jan. 1938, Vol. 2, No. 1, pp. 22–23.)

1367. W2XE SHORT-WAVE TRANSMITTER [First American High-Power Short-Wave Transmitter "designed from Beginning to End specifically for Broadcast Use"].—J. P. Taylor. (*Electronics*, Dec. 1937, Vol. 10, pp. 23–27.)

www.americanradiohistory.com

1368. MODULATION-REGULATED TRANSMITTER ["Foreign" Floating-Carrier Developments on Same Lines as 1931 "Hapug-Modulation" Tests].—K. Mimietz. (*Funktech. Monatshefte*, Jan. 1938, No. 1, pp. 10–12.) For "Hapug-modulation" *see* 4057 of 1937.

1369. THE ECONOMICAL ASPECT OF BROADCAST STATIONS WITH VARIABLE CARRIER.—Schulze-Herringen. (*See* 1632.)

1370. ON RAISING THE EFFICIENCY OF RADIO-TELEPHONE SYSTEMS.—S. I. Tetelbaum. (*Izvestiya Elektroprom. Slab. Toka*, Nos. 10 & 11, 1937, pp. 25–33 & 21–28.)

A general discussion of various factors affecting the efficiency of radio-telephone systems is presented, and this is followed by a more detailed study of the efficiency of radio transmitters. The economical aspect of radio transmission is examined, and a formula is derived for computing the cost of one hour of operation. The energy balance of a radio transmitting station is then considered, and tables are given in which 15 different types of amplitude modulation are compared from the efficiency point of view. The figures given in the tables are discussed and their derivation is given in the second half of the paper.

1371. VALVES AND THEIR MODULATION [including Modulation on the Various Grids of Pentodes].—A. Marino. (*L'Elettrotec.*, No. 21, Vol. 24, 1937, pp. 683–684: summary only.)

1372. PLATE MODULATION OF SCREEN-GRID TUBES: NOTES ON OPERATION WITHOUT SIMULTANEOUS SCREEN MODULATION [Possible, contrary to General Belief, with Ordinary Pentodes: Practicable with Aligned-Grid (Beam) Valves].—F. M. Dukat. (*QST*, Feb. 1938, Vol. 22, No. 2, pp. 30–31.)

1373. GRID-CONTROLLED RECTIFIERS FOR AMATEUR H.V. POWER SUPPLIES [combining Rectification with Keying: the Special Eitel-McCullough Mercury-Vapour KY21].—(*QST*, Feb. 1938, Vol. 22, No. 2, pp. 34 and 37.)

1374. PAPERS ON COMPANDOR (COMPRESSOR & EXPANDOR) SYSTEMS.—Grigor'ev & others. (*See* 1635 & 1636.)

1375. HIGHER VOLUMES WITHOUT OVERLOADING [Gain-Regulating Circuit for limiting Peak Amplitudes], *and* A VOLUME-LIMITING AMPLIFIER [Western Electric 110A Programme Amplifier].—S. Doba, Jr: O. M. Hovgaard. (*Bell Lab. Record*, Jan. 1938, Vol. 16, No. 5, pp. 174–178: pp. 179–184.)

1376. A VOLUME LIMITER: A PEAK CHOPPER FOR BROADCAST TRANSMITTERS, WHICH RAISES AVERAGE LEVEL OF MODULATION; MAKES IMPOSSIBLE OVER-MODULATION FOR ANY EXTENDED PERIOD.—C. F. Sheaffer. (*Electronics*, Dec. 1937, Vol. 10, pp. 20–21.)

RECEPTION

1377. THE AMPLIFICATION OF ULTRA-HIGH FREQUENCIES [Design Calculations for Two Stages preceding Detector or Mixing Valve (based on Strutt's Valve Measurements): Calculation of Inductance Coil Details (based largely on Work of Lehmann and Schwarz): etc.]—R. Wilke. (*Funktech. Monatshefte*, Jan. 1938, No. 1, pp. 27–31.) With 15 literature references.

1378. 28-MEGACYCLE PRE-SELECTION: CIRCUIT HINTS AND PRACTICAL CONSTRUCTION.—J. Millen & D. Bacon. (*QST*, Feb. 1938, Vol. 22, No. 2, pp. 21–23 and 80, 82.)

1379. DESIGN TRENDS IN MOBILE [Aircraft and Police] RECEIVERS IN AMERICA.—L. M. Clement & F. X. Rettenmeyer. (*RCA Review*, Jan. 1938, Vol. 2, No. 3, pp. 317–325: to be contd.) Paper delivered before a Berlin Society.

1380. PARASITIC COUPLINGS IN RADIO RECEIVERS, AND THEIR ELIMINATION.—G. Cocci. (*L'Elettrotec.*, Supplement A to Vol. 23, 1936; Fasc. 3, Electrical Communications (a) Radio Reception: pp. 180–183.) One of a large number of papers on various subjects connected with reception.

1381. NEGATIVE FEEDBACK CIRCUITS WITH SPECIAL REFERENCE TO THE BROADCAST RECEIVER [Analysis showing Advantages (including Easier Matching) and Disadvantages (including Increased Instability outside the Transmission Band) of A.F. Negative Feedback: Various Circuits (including Special Forms of "Voltage" Feedback Circuit): Influence of Negative Feedback on Working Conditions of Valves: Negative Feedback to Screen Grid, and Its Special Properties: etc.].—L. Brück. (*Telefunken-Röhre*, Dec. 1937, No. 11, pp. 244–277.)

1382. A REGENERATIVE [Tuned R.F.] RECEIVER WITH HIGH AUDIO SELECTIVITY [embodying the "Selectosphere" High-Selectivity Amplitude-Limiting Acoustical Unit].—F. M. Gager & A. F. Graham. (*QST*, Feb. 1938, Vol. 22, No. 2, pp. 16–18 and 37.)

1383. THE PRESENT POSITION OF BROADCAST RECEIVER CONSTRUCTION IN AUSTRIA.—H. G. Singer. (*Elektrot. u. Maschinbau*, No. 4, Vol. 56, 1938, pp. 44–48.)

1384. NEW DEVELOPMENTS FOR THE SINGLE-SPAN SUPERHET [Increased Selectivity by Quartz Resonator (as Coupling Element or as Parallel-Resonant Anode Circuit) or by Bridge Filter: Elimination of Mixing-Valve Whistle: Improved Input Circuit: Stabilisation of Station Scale Calibration (against Changes produced by AVC) by Automatic Tuning Correction and Press-Button Map Scale: Reflex Connection].—K. Thiele. (*Funktech. Monatshefte*, Jan. 1938, No. 1, pp. 19–23.)

1385. BATTERY RADIO DESIGN.—P. Marsal. (*Electronics*, Jan. 1938, Vol. 11, pp. 12–14.)

www.americanradiohistory.com

1386. FRENCH PUSH-BUTTON RADIO RECEIVER [with Provision for 150 Stations: "Coppelia Automatic Receiver"].—(*Electronics*, Dec. 1937, Vol. 10, p. 50.)

1387. INDUCTANCE TUNING [Old Method successfully Revived in New Form: Demonstration of 0.54–65 Mc/s Receiver].—P. Ware. (*Electronics*, Dec. 1937, Vol. 10, p. 22.)

1388. MAGNETIC TUNING DEVICES [Inductance Variation by Remote Control: Permeability of Powdered-Iron Core varied by Magnetising Current of Larger Control Magnet].—L. de Kramolin. (*Wireless World*, 24th Feb. 1938, Vol. 42, pp. 160–162.)

1389. REMOTE CONTROL DEVICE FOR RADIO RECEIVERS [using Long-Wave Carrier-Current Signals along Mains Wiring].—Seeley, Deal, & Kimball. (*Science*, 28th Jan. 1938, Vol. 87, Supp. p. 10.) *See* also 934 of March, and 1390 & 1391, below.

1390. A NEW SYSTEM OF REMOTE CONTROL [by Carrier Currents at Low Radio Frequencies (below 500 kc/s) along Mains Wiring System, etc., working Cold-Cathode Gaseous Discharge Tube, with Auxiliary Gap, and/or High-Vacuum Hot-Cathode Phase or Frequency Detectors].—C. N. Kimball. (*RCA Review*, Jan. 1938, Vol. 2, No. 3, pp. 303–316.) For various purposes, including remote control of broadcast receivers provided with "electric tuning." *See* also 1389, above.

1391. REMOTE CONTROL [of Broadcast Receivers, etc.] BY WIRED WIRELESS [American System].—W. N. Weeden. (*Wireless World*, 17th Feb. 1938, Vol. 42, pp. 138–140.) *Cf.* 1389.

1392. MECHANICAL TUNING SYSTEM: AUTOMATIC CONTROL BY AN ELECTRO-MAGNETIC BRAKE [Simple Philips System and a More Elaborate Circuit with Special Advantages].—A. Cooke. (*Wireless World*, 10th Feb. 1938, Vol. 42, pp. 131–132.) For earlier papers on "touch tuning" *see* 2126 of 1937.

1393. AUTOMATIC SHARP TUNING [Automatic Tuning Correction: Disadvantages of Correct Tuning by "Silent Tuning" (Inter-Station Noise Suppression) with Accurate Switch-In Curve: Automatic Tuning Correctors—Discriminator Circuits (Two-Circuit Type: Later and Better Band-Filter Type) —and Corrector Circuits (Pentode as Inductance: Pentode as Capacity): Working Curves of Device: Importance of Correct Limitation of Corrector Frequency-Span].—E. Kettel. (*Telefunken-Röhre*, Dec. 1937, No. 11, pp. 213–229.)

1394. RADIO TUNING DIAL SHOWS STATIONS ON MAP.—Quintavalle. (*Sci. News Letter*, 18th Dec. 1937, Vol. 32, p. 393.)

1395. CORRECTIONS AND ADDITIONS TO "THE DESIGN CALCULATION OF TONE CONTROLS."—H. Pitsch. (*Funktech. Monatshefte*, Jan. 1938, No. 1, p. 12.) *See* 490 of February.

1396. THE DIODE DETECTOR [and Its Mode of Action: Necessity for Careful Design of Associated Circuits].—W. T. Cocking. (*Wireless World*, 27th Jan. & 3rd Feb. 1938, Vol. 42, pp. 74–76 & 103–105.)

1397. AUDIO TRANSFORMERS SEALED IN ALUMINIUM CANS [for Working in Tropical Humidity].—R. Lee. (*Electronics*, Dec. 1937, Vol. 10, p. 46.)

1398. THE PARIS COMPONENTS EXHIBITION.—E. Aisberg. (*Wireless World*, 17th Feb. 1938, Vol. 42, pp. 150–151.)

1399. FADING ON SHORT-WAVE SINGLE-SIDEBAND RADIO-TELEPHONY [Use of Theory of Probability: Effect of AVC on Distortion].—Dolukhanov. (*See* 1294.)

1400. PAPERS ON COMPANDOR (COMPRESSOR & EXPANDOR) SYSTEMS.—Grigor'ev & others. (*See* 1635 & 1636.)

1401. THE DETERMINATION OF THE PERMISSIBLE FIELD-STRENGTH RATIO BETWEEN TWO SIMULTANEOUSLY RECEIVED STATIONS AS A FUNCTION OF THE FREQUENCY SEPARATION [Theoretical and Experimental Treatment].—J. Grosskopf & E. Meinel. (*T.F.T.*, Dec. 1937, Vol. 26, No. 12, pp. 280–284.) For spacings greater than 6000 c/s and less than 50 c/s a field-strength ratio of 1×10^{-2} is adequate: for spacings between 50 c/s and 6000 c/s the ratio must be 3×10^{-4}.

1402. THE FREQUENCY SPECTRUM OF H.F. PULSES [in Relation to the Interference produced in Broadcast Reception].—P. Kotowski & S. Sonnenfeld. (*E.N.T.*, Nov. 1937, Vol. 14, No. 11, pp. 360–369.)

Various known methods of pulse production and pulse forms are described in § 2. The duration and frequency bands of these pulses required for the separation of the ground wave from its E-region echo are discussed in § 3 (Fig. 1), the forms and spectra in § 4 (amplitude spectra Fig. 3). It is found that, for equal pulse heights and half-height breadths T, the pulse forms (Fig. 2) have approximately the same amplitude spectrum up to the frequency $1/T$. The disturbance produced by pulse emitters in broadcast reception is investigated in § 5; Fig. 4 shows the received field-strength, integrated over a band-width of 10^4 c/s, from (a) a rectangular pulse, (b) the rounded pulse shown in Fig. 2c. The optimum number of emitted pulses per second is discussed in § 6; it is determined by the propagation conditions. The construction of timing circuits for the pulses is described in § 7; Fig. 5 shows the circuit of a h.f. generator giving pulses at an audio-frequency rate, Fig. 6 oscillograms of the pulses produced. The pulse spectrum of this generator was investigated experimentally (§ 8, Fig. 7). In general it is found that, in order to produce as little interference as possible, the spectrum of a pulse emitter must fall rapidly as the distance from the carrier frequency increases.

www.americanradiohistory.com

1403. THE INTERFERENCE PRODUCED BY LINEAR CROSS-TALK IN THE LOW-FREQUENCY BROADCAST BAND.—A. Gese. (*E.N.T.*, Nov. 1937, Vol. 14, No. 11, pp. 348–360.)

The question here dealt with experimentally is: to what degree may a second programme be heard side-by-side with a perfectly-reproduced first one, without disturbing it? The method of measurement is described in § 2 (circuit Fig. 1); a second programme was introduced side-by-side with the first and attenuated until it appeared to a group of eight persons to have no further disturbing effect. Disturbance by pure tones is discussed in § 4; Fig. 6 shows the required attenuation as a function of frequency, when the disturbed programme is music and speech. Fig. 7 gives curves for the disturbing tone alone. § 5 describes the disturbance of one programme by another (results Figs. 8, 9). The disturbing effect was most marked when the programmes were of different natures. The disturbing programme alone (§ 6) and the effect of the ordinary degree of noise in the room (§ 7, Fig. 14) were also investigated. The values of attenuation required were in general found to vary between 4 and 7.5 nepers. The relation of the results to the recommendations of the CCI is discussed (§ 9).

1404. THE MEASUREMENT OF HIGH-FREQUENCY [Radio Interference] VOLTAGES PRODUCED BY COMMUTATOR MACHINES.—E. Paolini. (*Alta Frequenza*, Jan. 1938, Vol. 7, No. 1, pp. 5–28.)

Author's summary:—An apparatus is described with which it is possible to measure high-frequency voltages, in the medium- and long-wave regions, modulated at audio-frequencies. The measurement is in particular connection with the control of parasitic voltages at the terminals of electrical apparatus in current use. With the same apparatus it is possible to carry out measurements of electric field strength and of the e.m.f. in an aerial, so that all the elements required to attack the problem of the elimination of broadcast interference from electrical machines and appliances can thus be determined. Some tabulated examples are given showing the efficacy of suppression devices and the uniformity of interfering voltages produced by different machines of the same type.

1405. PAPERS ON RADIO INTERFERENCE, ITS MEASUREMENT AND SUPPRESSION.—Ruelle: Gramaglia: Borsarelli. (*L'Elettrotec.*, Supplement A to Vol. 23, 1936: Fasc. 3, Electrical Communications (a) Radio Reception: pp. 23–42.) One of a large number of papers on various subjects connected with reception.

1406. ON THE ELIMINATION OF INTERFERENCE FROM MAINS-DRIVEN AMPLIFIERS [by Measures taken at the Amplifier itself].—R. Greiner. (*T.F.T.*, Nov. 1937, Vol. 26, No. 11, pp. 256–261.)

1407. HIGH-FREQUENCY RADIO INTERFERENCE FROM 3-PHASE/D.C. MERCURY-VAPOUR MUTATORS FOR TRAMWAY SYSTEMS, ETC. [including Empirical Attenuation Formula], *and* MEASUREMENTS OF TROLLEY-WIRE HIGH-FREQUENCY IMPEDANCE OF TRAMWAY SYSTEMS [Values between 25 & 1800 Ohms in Range 150–1500 kc/s, owing to Numerous Reflection Points: but 50% are around 200 Ohms].—W. Gerber & H. Kölliker. (*Bull. Assoc. suisse des Élec.*, No. 25, Vol. 28, 1937, pp. 654–655: pp. 655–656: in German.)

1408. PAPERS AND DISCUSSIONS ON INSULATORS [including Radio Interference] AT THE INTERNATIONAL HIGH-TENSION CONFERENCE, PARIS, 1937.—(*Rev. Gén. de l'Élec.*, 22nd & 29th Jan. 1938, Vol. 43, Nos. 4 & 5, pp. 126–127 & 146–149.)

1409. TESTS ON DEFECTIVE INSULATORS [in Position and Action] ON HIGH-TENSION LINES CARRIED ON WOODEN POLES [using Simple Neon-Tube Device].—L. Martenet. (*Bull. Assoc. suisse des Élec.*, No. 24, Vol. 28, 1937, p. 625: in French.)

1410. BRITISH STANDARD SPECIFICATION FOR LIMITS OF RADIO INTERFERENCE.—British Standards Institution. (Spec. No. 800–1937: Nov. 1937: 11 pp.)

AERIALS AND AERIAL SYSTEMS

1411. STUDY OF A FRAME AERIAL DESIGNED FOR THE MEASUREMENT OF FIELD STRENGTHS IN THE NEIGHBOURHOOD OF AN AERIAL [Some Kilometres from Broadcasting Station].—C. Gutton & F. Carbenay. (*Ann. des Postes, T. et T.*, Jan. 1938, Vol. 27, No. 1, pp. 1–31.)

The frame (designed so that its effective height can be calculated accurately) being properly tuned and oriented to receive the (unmodulated) transmission, its resistance R is measured by the method of added resistances, with the help of a thermocouple inserted at the mid-point of the winding. No valve circuit is used, which allows perfect symmetry of the frame to be obtained and thus eliminates "antenna effect" without adding any supplementary connection liable to modify the effective height. Then, the added resistances being removed, the current I_0 induced in the frame by the transmission is measured, and RI_0 divided by the effective height gives the field strength. With a thermocouple of 1.3 ohms the method is satisfactory for field strengths down to about 250 mv/m; the accuracy is within about 3%.

1412. THE CALCULATION OF CAPACITY AND RESISTANCE OF LOOP AERIALS FOR RADIO BEACONS.—A. N. Plemyannikov. (*Izvestiya Elektroprom. Slab. Toka*, No. 10, 1937, pp. 19–24.)

The methods proposed for calculating the capacity and resistance of single-turn symmetrical loop aerials are derived from those employed in the design of open aerials. Use is made of the fact that a vertical plane passing through the apex of

www.americanradiohistory.com

the loop and the middle point of the base (zero potential points) divides the loop into two equal and electrically symmetrical parts. For the calculation of capacity the two halves of the aerial can be regarded as electrical images of each other and the method of G. W. O. Howe used. For resistance calculations, on the other hand, the loop can be regarded as consisting of two series-connected open aerials. The necessary formulae are derived and a numerical example is included. Certain practical recommendations are also made.

1413. AN ANTI-STATIC LOOP FOR AIRCRAFT ["6004 A Radio Compass Antenna Outfit": Electrostatic Shielding: Few Turns, giving Low Impedance suitable for connection by 20 ft. or more of Concentric Line].—J. E. Corbin. (*Bell Lab. Record*, Feb. 1938, Vol. 16, No. 6, pp. 201–202.)

1414. PRINCIPLES OF THE MUSA ["Multiple-Unit Steerable Antenna"], *also* MUSA APPARATUS, *and* THE MUSA FROM THE OUTSIDE.—Feldman: Sharpless: Lowry. (*Bell Lab. Record*, Jan. 1938, Vol. 16, No. 5, pp. 148–152: pp. 153–156: Feb. 1938, No. 6, pp. 203–207.)

1415. ROTATABLE TOWER-AERIALS [at Dutch Short-Wave Stations PHOHI and PCI].—Philips Company. (*Bull. Assoc. suisse des Élec.*, No. 25, Vol. 28, 1937, p. 660.) *See* also *Génie Civil*, 15th Jan. 1938, pp. 67–68.

1416. THE WTAR DIRECTIONAL ARRAY [Two Radiators 210 ft, One 280 ft: Some Results].—G. H. Brown. (*Electronics*, Jan. 1938, Vol. 11, No. 1, p. 38.) Fundamental details are discussed on pp. 101–103 of the paper dealt with in 1782 of 1937.

1417. DIRECTIONAL ANTENNAS WITH CLOSELY SPACED ELEMENTS.—J. D. Kraus. (*QST*, Jan. 1938, Vol. 22, No. 1, pp. 21–23 and 37.)

1418. INEXPENSIVE COAXIAL R.F. TRANSMISSION LINE.—D. A. Smith. (*QST*, Feb. 1938, Vol. 22, No. 2, pp. 19–20 and 74 . . . 80.)

1419. THE MELTING OF FROZEN DEPOSITS ON FEEDERS FOR SHORT-WAVE AERIALS.—B. V. Braude. (*Izvestiya Elektroprom. Slab. Toka*, No. 10, 1937, pp. 10–18.)

A theoretical and experimental investigation of the effect of such deposits on the attenuation of feeders, of the operation of the heating circuit and filter, and of the time necessary for melting for various atmospheric conditions and heating currents.

1420. THE ELIMINATION OF FROZEN DEPOSITS ON OVERHEAD LINES BY HEATING OF THE CONDUCTORS.—Jobin. (*Rev. Gén. de l'Élec.*, 22nd Jan. 1938, Vol. 43, No. 4, pp. 124–125.)

1421. STATIONARY OSCILLATION PHENOMENA ON LONG LEADS [Convenient Evaluation Methods].—E. Grünwald. (*E.N.T.*, Nov. 1937, Vol. 14, No. 11, pp. 343–348.)

A graphical method is given (Fig. 1) for determining the variation of voltage and current along a lead; analytical expressions for the absolute values of current, voltage, phase angle, etc., are also given. The results may be represented as the sum of a progressive, steadily increasing wave and a stationary damped wave. A graphical method of determining amplitudes from the current and voltage ratios at the end of the lead is illustrated by Fig. 4a. Fig. 4b shows a graphical representation of the hyperbolic sine and cosine functions on which the methods here given may be based.

1422. THE CONDUCTIVITY OF THE GROUND AND ITS DEPENDENCE ON THE MOISTURE DISTRIBUTION.—E. Hirt. (*E.T.Z.*, 13th Jan. 1938, Vol. 59, No. 2, pp. 43–44.) For Henney's work, here referred to and summarised in the same issue (pp. 45–46) *see* 2179 of 1936.

1423. RADIAL GROUND SYSTEM CHART [showing Signal Strengths at 1 Mile on 30, 60, and 120-Wire Systems].—G. H. Brown. (*Electronics*, Jan. 1938, Vol. 11, No. 1, p. 33.)

VALVES AND THERMIONICS

1424. MULTI-ANODE MAGNETRONS FOR LARGE POWERS ON DECIMETRE WAVES, *and* WATER-COOLED FOUR-SLIT MAGNETRONS.—Gutton & Berline: Ahrens. (*See* 1354 & 1355.)

1425. HISTORICAL DEVELOPMENT OF MAGNETRON AND SPLIT-ANODE MAGNETRON.—Habann. (*See* 1356.)

1426. THE INPUT ADMITTANCE OF VALVES AT VERY HIGH FREQUENCIES.—E. Paolini. (*L'Elettrotec.*, No. 20, Vol. 24, 1937, p. 641: summary only.)

1427. THE NOISES IN RECEIVING VALVES IN THE REGION 150 KC/S TO 15 MC/S: PART II.—H. Rothe & W. Engbert. (*Telefunken-Röhre*, 15th Dec. 1937, No. 11, pp. 183–212.)

"Since the appearance of the first report on the h.f. noise in receiving valves [Rothe & Plato, 3765 of 1936], the physical foundations of the shot effect in space-charge-limited current flow have been adequately explained by the theoretical work of Schottky and Spenke [*see*, for example, 1361/1363 and 3310 of 1937]. We, in addition, have meanwhile been able to improve our measuring methods still further and, in particular, to determine by calculation as well as by actual measurement the contribution made by the static fluctuations of the 'current sharing' in multi-grid valves [*see*, for example, 2575 of 1937 and back references] to the noise current. In the following pages, therefore, the whole of the noise phenomena in receiving valves at high frequencies in the range 150 kc/s to 15 Mc/s will be set out in a summarised fashion. The results of the first report will in this way be extended and corrected in important points. New material is provided by the investigations on the noise in mixing valves."

Authors' summary:—The new Schottky-Spenke calculation of the shot effect in space-charge-limited current flow shows that the "weakening factor" of the space-charge threshold decreases with increasing effective potential, and that a valve generates noise like a resistance of magnitude equal to the resistance of the cathode/control-grid-surface gap at half the cathode temperature.

www.americanradiohistory.com

The equivalent resistance of a triode is thus given as inversely proportional to the slope, and is therefore the smaller, the steeper the slope is made. Numerous noise measurements have confirmed this theory and shown that calculations and measurements agree excellently both for "weakening factor" and for equivalent resistance. The latter is of the order of 1–2 kilohms for ordinary triodes with indirectly heated cathodes.

With multi-grid valves the noise current of the triode is supplemented by a noise current from current-sharing fluctuations resulting from the statically fluctuating "eigen"-energies of the electrons. This additional noise current is proportional to the current-sharing factor $I_{sg} : I_a$, and produces for ordinary pentodes ($I_{sg} : I_a$ about 1 : 3) an increase of the equivalent grid resistance to three times [*i.e.* to 4–5 kilohms] the corresponding triode resistance. Even so, with pentodes having straight-line characteristics the equivalent resistances are normally lower than the resistances of the remaining circuit components; but this is not so in the case of valves with variable-mu characteristics, since these have less steep slopes [Figs. 9 & 10: thus the elimination of current-sharing noise is of much greater importance with variable-mu types than with straight-line types: with the AF3 the equivalent grid resistance, for a normal working point, is about 3 kilohms even in a triode connection, and rises to 10–20 kilohms in a pentode connection]. By improving the current sharing to a ratio $I_{sg} : I_a$ of 1 : 8 or 1 : 10, however, the current-sharing noise can be practically eliminated. With experimental valves of high slope and good current-sharing properties [very small grid/cathode gap—about 0.1 mm—and special design of the screen grid], equivalent resistances of 400–500 ohms in a triode connection, and 500–600 ohms in a pentode connection, were successfully obtained.

All mixing valves show a considerably higher noise level. Their equivalent resistance lies generally between 30 to 60 kilohms. This is due to the "modulation by current sharing" which is employed in all mixing valves, and which necessarily results in a high factor $F = 0.5 - 1$, and also to the "conversion slope" of these valves being flat compared with the steepness of the static slope. As regards noise it is always an advantage, for mixing valves, to make the heterodyning voltage as high as possible.

1428. EFFECTS OF SPACE CHARGE IN THE GRID/ANODE REGION OF VACUUM TUBES [Theoretical Treatment (with Experimental Verification) leading to Formulae and Curves applicable to Commercial Valves].—B. Salzberg & A. V. Haeff. (*RCA Review*, Jan. 1938, Vol. 2, No. 3, pp. 336–373.) *See* also 1341, above, and 1429, below. For contemporary work mentioned in footnote *see* 2577 of 1937 (Rothe, Kleen, Plato, Calpine) and 3394 of 1936 (Lukoshkov).

1429. CLARIFICATION OF OPERATION OF TYPE 6L6 BEAM POWER VALVE AND CRITICISM OF HARRIES'S EXPLANATION OF CURVATURE OF ANODE CHARACTERISTIC.—Salzberg & Haeff. (In paper dealt with in 1428, above.)

1430. FUNDAMENTAL POINTS ON THE CHARACTERISTIC CURVES OF VARIABLE-MU VALVES [Persistence of Erroneous Ideas due to Use of Logarithmic Scale for Anode Current, and Consequent Shape of Curve: Suggested Clarification by Use of Logarithmic Scale for Grid Voltage also].—F. Bergtold. (*Funktech. Monatshefte*, Jan. 1938, No. 1, pp. 13–14.)

The writer has already shown in his book and in a 1932 paper that the ideal regulating characteristic can certainly be represented by an exponential function, but that the rôles of the grid voltage and the anode current must be interchanged in the commonly accepted formula, so that instead of the usual relation "anode current at any moment = anode current for zero grid voltage $\times e^{V_g/V_T}$" (where V_g is the momentary grid voltage and V_T the fixed grid voltage) the correct relation is "grid voltage at any moment = grid voltage for zero anode current $\times e^{-I_a/I_T}$" (where I_a is the momentary anode current and I_T the fixed anode current). In spite of the simplicity of his arguments, the former relation is repeatedly used and the correctness of the writer's ideas even disputed.

1431. THE DISTRIBUTION OF CURRENT BETWEEN THE ANODE AND GRID OF A TRIODE.—A. I. Berg. (*Izvestiya Elektroprom. Slab. Toka*, No. 11, 1937, pp. 11–14.)

An experimental investigation was conducted in which static characteristics of medium-powered triodes were studied with the aid of a cathode-ray oscillograph. In the circuit used (Fig. 1) the excitation voltage was applied to one pair of the oscillograph plates, while to the other pair were applied voltages proportional to the grid, anode, and total currents, and some of the oscillograms so obtained are shown. Formulae are quoted (*see* 3333 of 1937) giving the anode current when grid current is flowing (eqn. 2) and the grid current as determined by the grid and anode voltages (eqn. 1). In addition, formulae are derived showing the relationship between the anode and grid currents (eqn. 7) and determining the anode current when grid current is flowing (eqns. 11 and 12). Static characteristics of a valve calculated on the basis of this investigation showed considerable accuracy when checked experimentally.

1432. DYNAMIC CHARACTERISTICS OF ELECTRONIC VALVES [taken by Pajetta's Method].—Pradella & Zannoni: Pajetta. (*L'Elettrotec.*, No. 18, Vol. 24, 1937, p. 580.) *See* 2176 of 1937.

1433. METHOD FOR THE TESTING OF LARGE NUMBERS OF OUTPUT VALVES, WITH AUTOMATIC DETERMINATION OF "KLIRR" FACTOR [made necessary by Stringent Modern Requirements of Freedom from Non-Linear Distortion, involving Such Mechanical Accuracy in Manufacture that at present Very Thorough Checking is Necessary].—P. Wolf & Th. Tillmann. (*Telefunken-Röhre*, Dec. 1937, No. 11, pp. 278–287.)

Of the various factors involved in the series testing of output valves, the checking of the working point, the insulation (particularly the absence

www.americanradiohistory.com

of grid leakage), and the amplification are all fairly simple to carry out. On the other hand, the measurement of distortion is usually by no means easy and is liable to take a long time. The rapid method here described—an application of the "compensation" method given by Graffunder, Kleen, & Wehnert (1051 of 1936)—uses the 50 c/s mains to provide the test frequency, and the complete circuit (theoretical diagram Fig. 1) measures not only the "klirr" factor but also the output energy, and (by switching in a loudspeaker) also detects microphonicity.

A particularly interesting point in the scheme is the automatic adjustment of the potentiometer to the balancing point. This could be accomplished, of course, by the intervention of a small motor, but such a complication is avoided by the use of an indirectly heated Urdox resistance developed for the purpose on the same lines as that simultaneously brought out by the Osram Company (*see* 1175 of March and back references). The semiconductor resistance element of this device is connected in series with a fixed resistance *R* (Fig. 2) to form a potentiometer whose adjustment is accomplished by the variation of the heating current supplied through the amplifier AL 4. In the complete circuit of Fig. 1 this auxiliary circuit of Fig. 2 is represented by the dotted elements connected between *D* and *E*.

1434. NEW METHOD OF STABILISATION OF ANODE CURRENT OF ELECTRON VALVES AGAINST VARIATION OF ANODE VOLTAGE [by Parallel Circuit containing Resistance and Counter E.M.F: Automatic Compensation of Anode-Voltage Increase by Increase of Grid Negative Bias].—R. Pinoir. (*Comptes Rendus*, 24th Jan. 1938, Vol. 206, No. 4, pp. 244–247.)

1435. ELECTROMETER VALVES [and the T 113, developed from T 115 by replacing Amber Insulation by Special Glass and by Use of Thorium Cathode (producing Reduced Thermal and Photoelectric Emission from Grid): T 114 giving Still Smaller Grid Current].—H. Daene & W. Hubmann. (*E.T.Z.*, 20th Jan. 1938, Vol. 59, No. 3, pp. 72–73: summary only.)

1436. THE "OSRAM X 65," A TRIODE HEXODE PRIMARILY FOR EFFICIENT FREQUENCY CHANGING ON SHORT WAVES.—(*Journ. Scient. Instr.*, Jan. 1938, Vol. 15, No. 1, p. 31.)

1437. "TELEFUNKEN-RUNDFUNKRÖHREN: EIGENSCHAFTEN UND ANWENDUNG" [Properties and Use of Telefunken Broadcast Receiving Valves: Book Review].—L. Ratheiser. (*Alta Frequenza*, Jan. 1938, Vol. 7, No. 1, p. 77.)

1438. "MODERNE MEHRGITTER-ELEKTRONENRÖHREN" [Multi-Grid Valves, Vol. I: Book Review].—M. J. O. Strutt. (*Wireless Engineer*, Feb. 1938, Vol. 15, No. 2, p. 92.) For a lecture under this title *see* 1358 of 1937.

1439. THE SECONDARY ELECTRON EMISSION FROM VAPOUR-DEPOSITED FILMS OF BERYLLIUM.—Kollath. (*See* 1541.)

1440. PAPER ON SECONDARY EMISSION.—Warnecke & Lortie. (*See* 1542.)

1441. ELECTRON EMISSION BY THE IMPACT OF POSITIVE IONS ON AN MgO-CATHODE OF AN ANOMALOUS GLOW DISCHARGE.—A. Güntherschulze & W. Bär. (*Zeitschr. f. Physik*, No. 11/12, Vol. 107, 1937, pp. 730–740.)

1442. THE OPTIMUM THICKNESS OF THIN ALKALI FILMS ON OTHER METALS FOR THE THERMIONIC AND PHOTOELECTRIC EFFECTS [Measured Value for Maximum Emission].—H. Mayer. (*Naturwiss.*, 14th Jan. 1938, Vol. 26, No. 2, pp. 28–29.)

1443. THE TEMPERATURE VARIATION OF THE WORK FUNCTION OF CLEAN AND OF THORIATED TUNGSTEN.—A. L. Reimann. (*Proc. Roy. Soc.*, Series A, 22nd Dec. 1937, Vol. 163, No. 915, pp. 499–510.) For reference to abstract of this paper *see* 986 of March.

1444. OSCILLOGRAPHY OF ADSORPTION PHENOMENA: 3—RATES OF DEPOSITION OF OXYGEN UPON TUNGSTEN [traced by Photographing the Fall of Electron Emission: Condensation Constant: Temperature Dependence: Heat of Activation].—M. C. Johnson & A. F. Henson. (*Proc. Roy. Soc.*, Series A, 21st Jan. 1938, Vol. 164, No. 917, pp. S 7–S 8: abstract only.)

1445. AN ELECTRON MICROSCOPE FOR STUDYING THERMAL AND SECONDARY ELECTRON EMISSION.—E. Meschter. (*Review Scient. Instr.*, Jan. 1938, Vol. 9, No. 1, pp. 12–15.)

DIRECTIONAL WIRELESS

1446. EXPLANATION OF THE PRINCIPLE OF AN AUTOMATIC RADIOGONIOMETER [Rotating Frame (5–10 r.p.s.) and Amplifier transforming Signals into Unidirectional Sinusoidal Alternations, the Second Derivatives of whose Minima give Sharp Peaks and "strike" Thyratron which is automatically quenched whenever Frame passes East-West Direction: Bearing thus given by Mean Thyratron Current].—G. Lehmann. (*Génie Civil*, 5th Feb. 1938, Vol. 112, No. 6, p. 136.)

1447. NEW R.C.5 RADIO COMPASS, *and* THE RADIO COMPASS RC-5 BUSIGNIES APPLIED TO THE AUTOMATIC PILOT.—(*Aviation*, Nov. 1937, Vol. 36, No. 11, pp. 44–45: *Rev. de l'Armée de l'Air*, Feb. 1937, No. 91, pp. 229–231.)

1448. ROBOT LANDS AIRPLANES WITHOUT AID FROM PILOTS [U.S. Army Air Corps Automatic Blind Landing System].—Holloman. (*Sci. News Letter*, 29th Jan. 1938, Vol. 33, p. 68.)

1449. FULL AUTOMATIC BLIND LANDING SYSTEM: THE LANDING SYSTEM DEVELOPED BY THE U.S. ARMY.—(*Inter Avia*, 26th Oct. 1937, No. 484, pp. 1–2.)

www.americanradiohistory.com

1450. RECENT DEVELOPMENTS FOR SAFETY IN AVIATION IN THE U.S.A. [including Bendix and Other Blind-Landing Systems].—F. W. Petzel. (*Draht u. Aether*, Nov./Dec. 1937, Vol. 7, No. 11/12, pp. 149–158.)

1451. MEETING OF THE LILIENTHAL ASSOCIATION FOR AERONAUTICAL INVESTIGATIONS [Short Notes on Papers on the Use of Directional Wireless in Flying].—Stierstadt. (*E.N.T.*, Nov. 1937, Vol. 14, No. 11, pp. 381–383.)

Notes are included on papers by Eckersley on "Fundamental Problems of Direction-Finding in Relation to Navigation of Aircraft" (polarisation error, use of double-frame aerial, use of short waves, scattered signals); by Glöckner on "Double-Frame Direction-Finders"; by Dieckmann on "The Frame Direction-Finder in an Abnormally Polarised Radiation Field"; by Kramer on "Rotating Radio Beacons using Ultra-Short Waves"; by Beuermann on "Direction-Finding with Ultra-Short Waves."

1452. THE USE OF RADIO DIRECTION-FINDING IN AERIAL NAVIGATION [Short Survey].—R. Elsner & E. Kramar. (*Lorenz-Berichte*, Sept. 1937, No. 3, pp. 106–115.)

1453. THE FREQUENCY SPECTRUM OF H.F. PULSES [in Relation to Interference produced].—Kotowski & Sonnenfeld. (*See* 1402.)

1454. THE CALCULATION OF CAPACITY AND RESISTANCE OF LOOP AERIALS FOR RADIO BEACONS.—Plemyannikov. (*See* 1412.)

1455. NAVIGATION BY WIRELESS: HOW DF BEARINGS ARE APPLIED.—(*Wireless World*, 3rd Feb. 1938, Vol. 42, pp. 92–94.)

ACOUSTICS AND AUDIO-FREQUENCIES

1456. ON THE EFFECT OF THE MAGNETIC FIELD IN THE GAP, AND OF THE MASS OF THE MOVING COIL, ON THE FREQUENCY CHARACTERISTIC OF AN ELECTRODYNAMIC HORN LOUDSPEAKER.—S. A. Makov. (*Izvestiya Elektroprom. Slab. Toka*, No. 11, 1937, pp. 32–35.)

A formula (8) is derived determining the efficiency of a loudspeaker at various frequencies, and on the basis of this formula the relationship between the natural frequency η_0, the highest frequency of the range η_b, and the magnetic field B in the gap is discussed. The main conclusions reached are as follows: (1) In order to obtain good efficiency at high frequencies it is not always necessary to use a moving coil of the smallest possible mass: (2) aluminium wire should be used for making moving coils in preference to copper wire: (3) the magnetic field in the gap should be made as strong as possible: and (4) it is not advisable to have the maximum efficiency of the loudspeaker (at η_0) higher than 50%.

1457. OSCILLOGRAPHICAL INVESTIGATIONS OF LOUDSPEAKER TRANSIENTS.—Helmbold. (*Journ. Acoust. Soc. Am.*, Jan. 1938, Vol. 9, No. 3, pp. 266–267.) Summary of the German paper referred to in 545 of February.

1458. A HORN CONSISTING OF MANIFOLD EXPONENTIAL SECTIONS, *and* ACOUSTIC NETWORKS IN LOUDSPEAKER CABINETS.—H. F. Olson: H. Knowles. (*Journ. Acoust. Soc. Am.*, Jan. 1938, Vol. 9, No. 3, p. 271: p. 271: summaries only.)

1459. RESONANCE IN TWO TYPES OF NON-UNIFORM TUBES [Two Open Cylinders of Different Diameters joined (i) End-to-End, (ii) by Conical Connecting Tube].—A. T. Jones. (*Journ. Acoust. Soc. Am.*, Jan. 1938, Vol. 9, No. 3, p. 271: summary only.)

1460. DETERMINATION OF THE RESONANCE POSITIONS OF LIQUIDS IN TUBES, BY A GALVANOMETER DEFLECTION [Circuit eliminating Subjective Observation].—C. Sălceanu & C. Istraty. (*Comptes Rendus*, 31st Jan. 1938, Vol. 206, No. 5, pp. 329–330.) For previous work depending on subjective observation *see* 1048 of March.

1461. VIBRATIONS OF FREE CIRCULAR PLATES: I—NORMAL MODES: II—COMPOUNDED NORMAL MODES: III—A STUDY OF CHLADNI'S ORIGINAL FIGURES [Vibrations produced by Solid-Carbon-Dioxide Method: Measurements of Frequencies of All Normal Modes in Interval of over Six Octaves: Photographs of Nodal Designs].—Mary D. Waller. (*Proc. Phys. Soc.*, 1st Jan. 1938, Vol. 50, Part 1, No. 277, pp. 70–76: 77–82: 83–86.)

1462. THE FREQUENCY OF LONGITUDINAL AND TORSIONAL VIBRATION OF UNLOADED AND LOADED BARS [Theory for Infinitely Thin and Finitely Thick Bars].—R. M. Davies. (*Phil. Mag.*, Feb. 1938, Series 7, Vol. 25, No. 167, pp. 364–386.)

1463. SOME PRACTICAL DATA RELATING TO ELECTRO-ACOUSTIC TRANSFORMERS [M.C. Loudspeakers: Condenser, Piezoelectric, and Ribbon Microphones: Gramophones].—M. Adam. (*Rev. Gén. de l'Élec.*, 8th Jan. 1938, Vol. 43, No. 2, pp. 47–52.)

1464. PRELIMINARY REPORT ON A HIGH-FIDELITY REPRODUCER FOR LATERAL-CUT DISC RECORDS [Response proportional to Recorded Velocity Amplitude (within ± 3 db) from 30 to 18 000 c/s].—F. V. Hunt & J. A. Pierce. (*Journ. Acoust. Soc. Am.*, Jan. 1938, Vol. 9, No. 3, p. 274: summary only.)

1465. THE APPLICATION OF NEGATIVE FEEDBACK TO ELECTRO-MECHANICAL DEVICES [*e.g.* Gramophone Recorder with Uniform Response 30–12 000 c/s and Exceptional Freedom from Distortion Products].—C. F. Wiebusch & L. Vieth. (*Journ. Acoust. Soc. Am.*, Jan. 1938, Vol. 9, No. 3, p. 273: summary only.)

1466. RECORD-CUTTING EQUIPMENT: HOME-MADE TRAVERSING MECHANISM FOR RECORDING ON DISCS.—D. E. Osman. (*Wireless World*, 10th Feb. 1938, Vol. 42, p. 123.)

www.americanradiohistory.com

1467. DEVICE, ON ROUTIN SYSTEM, FACILITATING THE APPLICATION OF THE GRAMOPHONE TO THE LEARNING OF FOREIGN LANGUAGES [etc: the "Mnémosyne" Repeater].—Lecornu. (*Génie Civil*, 12th Feb. 1938, Vol. 112, No. 7, pp. 154–155.)

1468. TURNTABLE WOBBLE INDICATOR.—Wichart. (*Electronics*, Feb. 1938, Vol. 11, No. 2, p. 13.)

1469. METROPOLITAN OPERA ON THE AIR [Lay-Out of Microphones, Control Equipment, etc.].—(*Electronics*, Dec. 1937, Vol. 10, pp. 30–31 and 37.)

1470. REMOTE PICK-UP EQUIPMENT [for Broadcasting: Survey of Large, Medium, and Small Equipments].—J. P. Taylor. (*Communications*, Jan. 1938, Vol. 18, No. 1, pp. 7–10 and 39.)

1471. THE IMPORTANCE OF THE DIRECTIONAL MICROPHONE FOR PICK-UP TECHNIQUE [Normal Directional, "Figure-of-Eight," and "Kidney-Shaped" Characteristics: Use for Large Orchestras, Soloist & Piano, in Strongly Echoing Halls, in Presence of Loudspeakers, etc.].—R. Forberger. (*Funktech. Monatshefte*, Jan. 1938, No. 1, pp. 23–27.)

1472. INDETERMINATION OF ACTION OF SYSTEMS FORMED OF A LARGE NUMBER OF ASSOCIATED ELEMENTARY CONTACTS, SUCH AS THE MICROPHONE OR THE COHERER [Theory].—A. Guillet. (*Comptes Rendus*, 31st Jan. 1938, Vol. 206, No. 5, pp. 333–335.)

1473. INTER-COMMUNICATION SYSTEMS [Loud-Speaking Telephone Systems for Factories, Offices, etc.].—H. B. Dent. (*Wireless World*, 24th Feb. 1938, Vol. 42, pp. 167–168.)

1474. IMPROVEMENTS IN CINEMA SOUND REPRODUCTION.—T. Wadsworth. (*BTH Activities*, Nov./Dec. 1937, Vol. 13, No. 6, pp. 228–236.)

1475. "SOUND RECORDING FOR FILMS."—W. F. Elliott. (At Patent Office Library, London: Cat. No. 78 302: 134 pp.)

1476. A LINEAR DECIBEL SCALE VOLUME INDICATOR [for Sound Recording].—F. G. Albin. (*Electronics*, Jan. 1938, Vol. 11, No. 1, p. 58: summary only.) "The author accounts for the exponential response of the d.c. amplifier [triple-grid valve] by stating that it is due to connecting the first grid to the plate": his explanation is given.

1477. REVERBERATION CONTROL IN MOTION PICTURE [Sound-Track] RECORDING.—J. K. Hilliard. (*Electronics*, Jan. 1938, Vol. 11, p. 15.)

1478. MAGNETIC RECORDING AND REPRODUCING.—C. N. Hickman. (*Electronics*, Dec. 1937, Vol. 10, pp. 54, 56, 58.) Summary of a *Bell Lab. Record* article on the work dealt with in 2999 of 1937.

1479. A MAGNETIC RECORDER [for Broadcast Programmes received on Ordinary Receiver: Single-Pole Electro-Magnet of Special Design: Other Improvements].—T. J. Malloy. (*Electronics*, Jan. 1938, Vol. 11, No. 1, pp. 30–32.)

1480. AUTOMATIC GAIN CONTROL [Constructional Details of 3-Valve Unit for Automatic Control in Public Address Transmission].—(*Wireless World*, 27th Jan. 1938, Vol. 42, pp. 78–81.)

1481. CONTRIBUTION TO THE PROBLEM OF THE HIGHEST PERMISSIBLE NOISE IN TELEPHONIC COMMUNICATION.—K. Braun. (*T.F.T.*, Dec. 1937, Vol. 26, No. 12, pp. 284–286.)

1482. THE INTERFERENCE PRODUCED BY LINEAR CROSS-TALK IN THE LOW-FREQUENCY BROADCAST BAND.—Gese. (*See* 1403.)

1483. DISTURBANCE PRODUCED BY NON-LINEAR DISTORTION.—von Braunmühl & Weber. (*Journ. Acoust. Soc. Am.*, Oct. 1937, Vol. 9, No. 2, pp. 170–172.) Long summary of the German paper dealt with in 3723 of 1937.

1484. NON-LINEAR DISTORTIONS IN ASYMMETRICAL PUSH-PULL AMPLIFIERS.—R. Feldtkeller. (*T.F.T.*, Oct. 1937, Vol. 26, No. 10, pp. 210–226.)

1485. A NEW METHOD FOR THE AUTOMATIC REGULATION OF THE CHARACTERISTICS OF AN AUDIO-FREQUENCY FILTER.—Laufer. (*See* 1337.)

1486. THE "SELECTOSPHERE" HIGH-SELECTIVITY AMPLITUDE-LIMITING ACOUSTICAL UNIT.—Gager & Graham. (*See* 1382.)

1487. TURNS RATIO OF CLASS B LINE-TO-GRID TRANSFORMERS [Discussion of Subject on which there seems to be "Some Confusion"].—D. Fortune. (*Communications*, Jan. 1938, Vol. 18, No. 1, pp. 20–21.)

1488. ON AN INERTIALESS PROCEDURE OF TAKING PHONO-PHOTOGRAPHIC RECORDS [of Frequency of Fundamental in Speech or Music].—Grützmacher & Lottermoser. (*Journ. Acoust. Soc. Am.*, Jan. 1938, Vol. 9, No. 3, p. 265.) Summary of the German paper dealt with in 590 of February.

1489. "OBJECTIVE ANALYSIS OF MUSICAL PERFORMANCE: VOL. IV" [Book Review].—C. E. Seashore (Edited by). (*Journ. Acoust. Soc. Am.*, Oct. 1937, Vol. 9, No. 2, p. 165.)

1490. THEORY OF THE CLARINET.—R. N. Ghosh. (*Journ. Acoust. Soc. Am.*, Jan. 1938, Vol. 9, No. 3, pp. 255–264.)

1491. THE MECHANICAL ACTION OF VIOLINS [including Response Curves of Famous Models and Tests on Aluminium Instruments].—F. A. Saunders. (*Journ. Acoust. Soc. Am.*, Oct. 1937, Vol. 9, No. 2, pp. 81–98.)

www.americanradiohistory.com

1492. THE INFLUENCE OF RECTIFIER CELLS ON SWITCHING PHENOMENA [in Relation to the Electrical Production of Vowel Sounds and Relay Action].—R. Hornickel. (*E.N.T.*, Nov. 1937, Vol. 14, No. 11, pp. 370–379.)

This investigation is concerned with the design of circuits for the electrical production of vowel sounds, in which a current source is required with uniform overtone content up to 4000 c/s. A dynatron "kipp" circuit was chosen; it was found that the overtone content was much improved by the use of a rectifier and an inductance. The observed effects of the rectifier on switching phenomena were also used to vary the switching time of a telegraphic relay.

Fig. 1 shows the current/voltage, Fig. 2 the resistance characteristic of a dry-plate (copper-oxide) rectifier. The positive and negative voltages applied are supposed to be sufficiently different from zero for the regions of constant resistance only to be considered. Fig. 3 shows a circuit for investigating the effect of the rectifier. Different time constants are effective on switching on and off. The electrical production of vowels is described, with calculations of the Fourier coefficients of some geometrical oscillation forms (rectangular pulse Figs. 4, 10; dynatron oscillation Figs. 5, 6; improved dynatron circuit containing rectifier valve Figs. 7, 9, 11, 12; dynatron oscillation behind a distortion-removing circuit Fig. 13). All required "formant" combinations could be obtained with this last circuit (Fig. 14). Fig. 15 shows the spectrum of a heavily-damped oscillation.

The effect of rectifiers on the switching time of a relay was also investigated (circuit Fig. 17). Experimental curves for various cases are given in Figs. 18–24.

1493. SOUND-FILMS AS DIFFRACTION GRATINGS FOR THE VISUAL FOURIER ANALYSIS OF SOUND-WAVES [using Striations on "Variable-Density" Sound-Film as Grating: Theoretical Results: Analysis of Transient Sounds].—D. Brown. (*Nature*, 25th Dec. 1937, Vol. 140, p. 1099.)

1494. MECHANICAL FREQUENCY ANALYSIS OF NON-RECURRING OSCILLATORY PROCESSES, AND DETERMINATION OF THE FREQUENCY CURVES OF TRANSMITTING SYSTEMS [by the Use of Transients].—von Békésy. (*Journ. Acoust. Soc. Am.*, Jan. 1938, Vol. 9, No. 3, pp. 265–266.) Long summary of German paper dealt with in 588 of February.

1495. PHOTOELECTRIC FOURIER ANALYSIS OF GIVEN CURVES.—von Békésy. (*Journ. Acoust. Soc. Am.*, Oct. 1937, Vol. 9, No. 2, pp. 169–170.) Summary of the German paper dealt with in 3573 of 1937.

1496. A DIRECT-READING PITCH RECORDER AND ITS APPLICATIONS TO MUSIC AND SPEECH.—J. Obata & R. Kobayashi. (*Journ. Acoust. Soc. Am.*, Oct. 1937, Vol. 9, No. 2, pp. 156–161.)

1497. A NEW INTERPRETATION [by Principle of Uncertainty] OF THE RESULTS OF EXPERIMENTS ON THE DIFFERENTIAL PITCH SENSITIVITY OF THE EAR.—W. E. Kock. (*Journ. Acoust. Soc. Am.*, Oct. 1937, pp. 129–134.)

1498. VARIOUS TYPES OF ABSOLUTE PITCH [Investigation on 103 Persons].—A. Bachem. (*Journ. Acoust. Soc. Am.*, Oct. 1937, Vol. 9, No. 2, pp. 146–151.)

1499. TRANSMISSION MEASURING SYSTEM UTILISING A GRAPHIC RECORDING METER.—W. W. Lindsay, Jr. (*Electronics*, Dec. 1937, Vol. 10 p. 48: summary only.)

1500. THE TRANSMISSION OF SOUND THROUGH METALLIC PARTITIONS [Researches in connection with Noise in Railway Carriages].—L. Renault. (*Rev. d'Acoustique*, May/July 1937, Vol. 6, Fasc. 3/4, pp. 69–101.)

1501. ABOUT AN ASYMPTOTIC RELATION OF FORCED VIBRATIONS OF PLATES AT HIGH FREQUENCIES.—A. Schoch. (*Journ. Acoust. Soc. Am.*, Oct. 1937, Vol. 9, No. 2, pp. 168–169.) Long summary of German paper referred to in 3779 of 1937.

1502. THE TENSION OF ACOUSTIC RADIATION, AND WAVES OF LARGE AMPLITUDE.—E. Fubini-Ghiron. (*Rev. d'Acoustique*, May/July 1937, Vol. 6, Fasc. 3/4, pp. 118–127.) A resumé of the writer's Italian paper (1035 of 1936) with the addition of new results. *See* also 198 of January.

1503. ABSORPTION EFFECTS IN SOUND TRANSMISSION MEASUREMENTS.—P. E. Sabine & L. G. Tamer. (*Journ. Acoust. Soc. Am.*, Jan. 1938, Vol. 9, No. 3, p. 273: summary only.)

1504. VARIATIONS IN SOUND-ABSORPTION COEFFICIENTS AS OBTAINED BY THE REVERBERATION-CHAMBER METHOD [and the Need for an Entirely New Approach to the Problem], *and* THE EFFECTS OF CYLINDRICAL PILLARS IN A REVERBERATION CHAMBER.—Morris, Nixon, & Parkinson: Sabine. (*Journ. Acoust. Soc. Am.*, Jan. 1938, Vol. 9, No. 3, pp. 234–243: p. 272–summary only.)

1505. A METHOD FOR EVALUATING COMPLIANT MATERIALS IN TERMS OF THEIR ABILITY TO ISOLATE VIBRATIONS.—W. Jack & J. S. Parkinson. (*Journ. Acoust. Soc. Am.*, Oct. 1937, Vol. 9, No. 2, pp. 141–145.)

1506. SOUND PROPAGATION IN DUCTS LINED WITH ABSORBING MATERIALS [Ventilator and Exhaust Systems].—L. J. Sivian. (*Journ. Acoust. Soc. Am.*, Oct. 1937, Vol. 9, No. 2, pp. 135–140.)

1507. ACOUSTICAL MEASUREMENTS IN SWISS CONCERT HALLS [for Broadcasting].—W. Furrer. (*Bull. Assoc. suisse des Élec.*, No. 25, Vol. 28, 1937, pp. 659–660: in German.)

1508. THE PREDETERMINATION OF SPEECH LEVELS IN AUDITORIA WITH COUPLED SPACES [Halls with Balconies].—G. E. Morison. (*Journ. Acoust. Soc. Am.*, Jan. 1938, Vol. 9, No. 3, pp. 244–254.)

1509. METHODS AND RESULTS OF SUBJECTIVE AND OBJECTIVE NOISE MEASUREMENT [Critical Comparison].—E. Lübcke. (*Naturwiss.*, 14th & 21st Jan. 1938, Vol. 26, Nos. 2 & 3, pp. 17–21: 33–41.)

www.americanradiohistory.com

1510. NOISE MEASUREMENTS AND THE INTERNATIONAL CONFERENCE ON ACOUSTICS.—H. Fletcher. (*Bell Lab. Record*, Feb. 1938, Vol. 16, No. 6, pp. 213–215.)

1511. SYMPOSIUM ON NOISE IN AUTOMOBILES, *and* THE METHODS OF NOISE MEASUREMENT AND THEIR APPLICATION TO THE AUTOMOBILE INDUSTRY.—(*Journ. Acoust. Soc. Am.*, Jan. 1938, Vol. 9, No. 3, p. 272 : p. 267 : summaries only.) The second title is that of a French paper by Kagan & Lubszynski.

1512. A SURVEY OF ACOUSTICS, ITS PROBLEMS AND POSSIBILITIES IN ITALY.—A. Gigli. (*L'Elettrotec.*, No. 21, Vol. 24, 1937, pp. 670–676.)

1513. SOME CULTURAL APPLICATIONS OF MODERN ACOUSTICS.—V. O. Knudsen. (*Journ. Acoust. Soc. Am.*, Jan. 1938, Vol. 9, No. 3, pp. 175–184.)

1514. HEARING OF SPEECH BY BONE CONDUCTION *and* LIMITS OF AUDITION FOR BONE CONDUCTION.—N. A. Watson. (*Journ. Acoust. Soc. Am.*, Oct. 1937, Vol. 9, No. 2, pp. 99–106 : Jan. 1938, Vol. 9, No. 3, p. 274—summary only.)

1515. THE THEORY OF THE ELECTRICAL PHENOMENA OF ROCHELLE SALT, *and* ACOUSTICAL DETECTION OF ELECTRICALLY WEAK VIBRATIONS IN QUARTZ PLATES.—Busch & others : Pielemeier. (*See* 1586 & 1587.)

PHOTOTELEGRAPHY AND TELEVISION

1516. DIRECT-VIEWING TYPE CATHODE-RAY TUBE FOR LARGE TELEVISION IMAGES [giving 18" x 24" Pictures : Thin Flat Fluorescent Screen].—I. G. Maloff. (*RCA Review*, Jan. 1938, Vol. 2, No. 3, pp. 289–296.) I.R.E. Rochester Meeting paper.

1517. TELEVISION CATHODE-RAY TUBES FOR THE AMATEUR [Kinescopes RCA-1800 and -1801 : Accessory Circuits : "Deflection Yoke" for minimising Pin-Cushion Distortion, etc.].—R. S. Burnap. (*RCA Review*, Jan. 1938, Vol. 2, No. 3, pp. 297–302.)

1518. PRODUCTION DEVELOPMENT OF TELEVISION TUBES.—(*Communications*, Jan. 1938, Vol. 18, No. 1, pp. 24, 26 and 36, 37.)

1519. CORRECTIONS TO INTEGRATION LIMITS OF EQUATIONS IN "SCREENS FOR TELEVISION TUBES."—Maloff & Epstein. (*Electronics*, Dec. 1937, Vol. 10, p. 54.) *See* 618 of February.

1520. APPARATUS FOR THE INVESTIGATION OF PHOSPHORS [Fluorescent Materials], ESPECIALLY AS TO THEIR EMPLOYMENT FOR TELEVISION PURPOSES.—W. Pragst. (*Funktech. Monatshefte*, Jan. 1938, No. 1, Supp. pp. 1–4.)

In a previous paper (2278 of 1937) the writer described an apparatus for the measurement of afterglow and the comparison of the maximum brightness, in which the materials under test were in open air and were excited by ultra-violet light : this apparatus is useful for preliminary tests. The equipment now described examines the materials under the working conditions of television, *i.e.* inside a special (continuously evacuated) cathode-ray tube, and gives a comparison not only of the duration, intensity, and spectral distribution of the afterglow of various substances, but also of the brightness of the excited luminosity (as opposed to the afterglow) and the optimum layer thickness for television purposes.

The materials to be tested are deposited in a row of small square specimens on the removable glass disc forming the end of the cylindrical cathode-ray tube ; the disc is then blackened on both sides (except for the strip formed by the squares) to prevent fogging of the record. The disc is pressed up against one wall of the recording chamber ; a row of holes in this wall agrees with the row of squares. Inside the chamber, very close to the perforated wall, rotates a motor-driven glass cylinder carrying a photographic film. The optical density values of the records (after development, drying, and replacement on the cylinder) are read photometrically by a rack-and-pinion-driven travelling photocell/lamp combination (shown diagrammatically in Fig. 3) which moves along the cylinder.

1521. A SINGLE-UNIT VIDEO CONVERTER [incorporating All Cathode-Ray-Tube Circuits, for Operation from Video Output of Receiver].—G. R. Mezger. (*Electronics*, Feb. 1938, Vol. 11, No. 2, pp. 31–34 and 74.)

1522. SWEEP CIRCUIT CONSIDERATIONS IN THE TELEVISION RECEIVER : THE DESIGN AND OPERATION OF SAW-TOOTH OSCILLATION GENERATORS ["Puckle" Circuit is Simplest to Build and Easiest to Synchronise : Constructional Details].—M. P. Wilder : Bedford & Puckle. (*QST*, Feb. 1938, Vol. 22, No. 2, pp. 38–41 and 52.)

1523. VALVE CIRCUITS FOR THE GENERATION OF RECTANGULAR WAVE FORMS [for Baird and Marconi-E.M.I. Synchronising Signals].—D. J. Mynall. (*BTH Activities*, Nov./Dec. 1937, Vol. 13, No. 6, pp. 205–211.)

1524. SUMMARIES OF TELEVISION PAPERS AT THE ROCHESTER I.R.E.-R.M.A. Meeting.—(*Electronics*, Dec. 1937, Vol. 10, pp. 11–15.)

1525. REVIEWING THE VIDEO ART [R.M.A. Television Committee Reports on U.S.A. Work and Visits to Europe, at Rochester Meeting].—(*Electronics*, Jan. 1938, Vol. 11, pp. 9–11.)

1526. THE CHARACTERISTICS OF THE NEW TELEVISION TRANSMISSIONS FROM THE EIFFEL TOWER [Thomson-Houston and Grammont Systems].—M. Adam. (*Génie Civil*, 29th Jan. 1938, Vol. 112, No. 5, pp. 104–107.)

1527. BELL LABS. TEST COAXIAL CABLE : VIDEO SIGNAL, PRODUCED BY SCANNING FILM AT 240 LINES, 24 FRAMES/SECOND, IS APPLIED TO NEW YORK/PHILADELPHIA SYSTEM.—(*Electronics*, Dec. 1937, Vol. 10, pp. 18–19.)

Using single sideband transmission by "double modulation and use of very precise filter structures : the frequency spectrum was thereby placed 100 kc above zero, thus avoiding the low frequencies where transmission and amplification are difficult."

www.americanradiohistory.com

"Results compare favourably with 441-line images shown elsewhere." Sequential scanning was used.

1528. TELEVISION OVER THE [New York/Philadelphia] COAXIAL CABLE, *and* TRANSMISSION CHARACTERISTICS OF THE COAXIAL STRUCTURE.—M. E. Strieby: J. F. Wentz. (*Bell Lab. Record*, Feb. 1938, Vol. 16, No. 6, pp. 188–195: pp. 196–200.)

1529. A MEASURING PROCESS FOR THE DETECTION OF INTERNAL IRREGULARITIES IN MANUFACTURING LENGTHS OF WIDE-BAND CABLES.—H. Lintzel. (*T.F.T.*, Nov. 1937, Vol. 26, No. 11, pp. 243–249.)

1530. CAPABILITY OF, AND LIABILITY TO, DISTURBANCE OF CONCENTRIC LEADS WITH LONGITUDINAL SLITS IN THE SCREENING CONDUCTOR [Theoretical Treatment].—H. Buchholz. (*E.N.T.*, Dec. 1937, Vol. 14, No. 12, pp. 408–443.)

Author's summary:—Part I: Effect of longitudinal slits in the screening conductor of concentric cables as regards the scattering of the internal field. § 1: Hypotheses; relations between electric and magnetic field components of plane waves on wires. § 2: Change in natural internal field of wave propagated within the cable due to presence of slits in screen. General formula for the magnetic field of such a wave. Graphical representation of spatial variation of external field along certain noticeable lines, for conductor with single and double slits, . . . and of variation of results with angle of slit opening. Part II: Effect of longitudinal slits on penetration of external fields into cable interior. § 3: Single slit. § 4: Double slit. Types of field. . . . Variation of results with angle of slit opening. § 5: Calculated estimate of magnetic cross-talk attenuation between two parallel systems, with either one or two longitudinal slits in the screening conductor.

1531. A TELEVISION-CABLE REPEATER FOR 1.3 MEGACYCLE/SECOND CARRIER FREQUENCY.—A. Agricola. (*T.F.T.*, Dec. 1937, Vol. 26, No. 12, pp. 275–280.)

1532. AMPLIFICATION PROBLEMS OF TELEVISION [Paper at I.R.E. Pacific Coast Convention, Spokane].—F. A. Everest. (*Communications*, Jan. 1938, Vol. 18, No. 1, pp. 15–19 and 38.)

1533. WIDE-BAND TELEVISION AMPLIFIERS: ELEMENTARY THEORY, WITH EXAMPLES, FOR EXTENDING THE UPPER FREQUENCY RANGE [for 441-Line Standard].—F. A. Everest. (*Electronics*, Jan. 1938, Vol. 11, pp. 16–19.)

1534. THE AMPLIFICATION OF [H.F.] WIDE FREQUENCY BANDS [for Television, Aperiodic Aerials, and Oscillographs, etc: with Special Reference to the Choice of the H.F. Pentodes employed].—W. Kleen. (*Telefunken-Röhre*, Dec. 1937, No. 11, pp. 230–243.)

Author's summary:—The fundamental laws are investigated of wide-band amplification by resistance-capacity, resonance [with highly damped tuned circuits], and carrier-frequency amplifiers [in the last, "the frequency band is impressed as a modulation product on a carrier of frequency ω_r and amplified by a carrier-frequency amplifier with a strongly damped fly-wheel circuit as external resistance"]. The requirement of uniformity of absolute values and phase angle of the amplification within the band, and the unavoidable capacities lying in parallel with the input and output of every stage, impose a natural upper limit to the attainable amplification per stage. It is shown that the maximum amplification attainable with one valve in the three above-named types of amplifier is proportional to the ratio of the slope S to the total capacity C lying in parallel with the valve.

The ratio C/S has the dimension of a time and can conveniently be represented as the time constant τ. If the upper limiting frequency ω_g is taken as that frequency at which the amplification has fallen to $1/\sqrt{2} = 0.7$ times the maximum amplification, the simple relation $V_m = 1/\tau \cdot \omega_g$ is found for the resistance-capacity and resonance amplifiers: for the carrier-frequency amplifier, if ω_g represents the upper limiting frequency of the modulation, $V_m = 1/2\tau \cdot \omega_g$. Available types of valve are discussed with regard to their usefulness for wide-band amplification. Points of view and possibilities as to the raising of amplification per stage are dealt with. The application of secondary-emission multipliers is a promising line of development, but the manufacture of technically useful amplifier valves with secondary-emission multiplication is not at the moment possible.

1535. A DEVICE FOR THE INVESTIGATION OF THE SENSITIVITY OF THE EYE TO ULTRA-SHORT ILLUMINATION [Duration 10^{-7} to 10^{-3} Second].—Deriagin. (*Comptes Rendus (Doklady) de l'Ac. des Sci. de l'URSS*, No. 8, Vol. 17, 1937, pp. 409–419: in English.)

1536. "RESONANT-LINE" TELEVISION MODULATION SYSTEM.—W. N. Parker: Philco Company. (In article referred to above—1524.) *See* also 1098 of March.

1537. THE TRANSMISSION OF WIRELESS PICTURES BY THE "IMPULSE METHOD" [for the Elimination of Fading and Echo Effects].—E. Hudec. (*T.F.T.*, Jan. 1938, Vol. 27, No. 1, pp. 1–13.) For previous papers *see* 4189 of 1937 and 635 of February; also 1106 of 1936 (Callahan & others).

1538. THE NEW LORENZ PICTURE-TELEGRAPHY SYSTEM [including the Latest Reproducing Method with Carbon Paper next to Drum and covered by Transparent Foil—giving "Visible Writing"].—W. Scheppmann & A. Eulenhöfer. (*Lorenz-Berichte*, Sept. 1937, No. 3, pp. 100–105.) The carbon paper may also be coated on both sides, giving an extra "original copy" below it.

1539. HOME FACSIMILE RECORDING [Automatic Operation: "in a 6-Hour Broadcast between Midnight and 6 a.m., 30 Feet of Facsimile Copy is available for Use at Breakfast Table": F.C.C. Arrangements with Broadcasting Stations: etc.].—S. Ostrolenk: Finch. (*Electronics*, Jan. 1938, Vol. 11, No. 1, pp. 26–27 and 60.)

www.americanradiohistory.com

1540. 10 YEARS OF PICTURE TELEGRAPHY IN GERMANY.—Goetsch. (*E.N.T.*, Dec. 1937, Vol. 14, No. 12, pp. 443–446.)

1541. THE SECONDARY ELECTRON EMISSION FROM VAPOUR-DEPOSITED FILMS OF BERYLLIUM [Experimental Results contradicting Bruining & de Boer's Simple "Oxidation" Explanation of Low S-E Factor of Films compared with High Factor of Solid Metal: leading to Discovery of Heat Treatment (in Oxygen) yielding Films with Factor as High (4–5) as Solid Metal].—R. Kollath. (*Funktech. Monatshefte*, Jan. 1938, No. 1, Supp. 4–5.)

1542. RELATION BETWEEN THE COEFFICIENT OF SECONDARY EMISSION AND THE RICHARDSON WORK FUNCTION [Investigations on Glucinium (Beryllium): Maximum Coefficient of 2.2 attained: Disagreement with Bruining & de Boer's Results].—R. Warnecke & M. Lortie. (*Journ. de Phys. et le Radium*, Jan. 1938, Vol. 9, No. 1, Supp. pp. 8–10 S.) *Cf.* 2971 of 1937.

1543. THE QUESTION OF THE ORIGIN OF THE PHOTOELECTRONS FROM VERY THIN ALKALI FILMS ON OTHER METALS [Experimental Results for Cs and K on W and Pt: Photoelectrons from Very Thin Films come from Carrier Metals; from Films Five Atoms and More Thick, from Alkali Film].—H. Mayer. (*Naturwiss.*, 14th Jan. 1938, Vol. 26, No. 2, p. 28.) For method *see* 3079 of 1937.

1544. THE OPTIMUM THICKNESS OF THIN ALKALI FILMS ON OTHER METALS FOR THE THERMIONIC AND PHOTOELECTRIC EFFECTS [Measured Value for Maximum Emission].—H. Mayer. (*Naturwiss.*, 14th Jan. 1938, Vol. 26, No. 2, pp. 28–29.)

1545. MEASUREMENTS ON PHOTOCATHODES IN CONTACT [Transparent Composite Cathodes with Alkali as One Metal do Not show Regular Variation of Long-Wavelength Maximum with Position of Alkali in Periodic Table: Selective Maxima lie in Limited Range: Effect of Angle of Incidence].—P. Görlich. (*Phil. Mag.*, Feb. 1938, Series 7, Vol. 25, No. 167, pp. 256–259.) For previous work on these cathodes *see* 627 of February, 1052 of 1937, and 3872 of 1936.

1546. ON THE BLOCKING-LAYER PHOTOELECTRIC EFFECT OF CAESIUM OXIDE [Construction of Cell with Clean Surface: Charging of Anode may influence Magnitude of E.M.F. of Barrier-Layer Photoeffect: Linearity of Dependence of Photoeffect on Light Intensity].—H. Teichmann. (*Phil. Mag.*, Feb. 1938, Series 7, Vol. 25, No. 167, pp. 269–273.) Experiments confirming views dealt with in 1932 Abstracts, pp. 468–469.

1547. ON A REDUCTION OF THE PHOTOELECTRIC EFFECT IN COMMERCIAL PHOTOCELLS [by Superposition of Light of Longer Wavelength].—S. Petralia. (*Nuovo Cimento*, Nov. 1937, Vol. 14, No. 9, pp. 411–418.) For the work of Marx & Meyer *see* 1931 Abstracts, p. 274.

1548. A QUANTITATIVE TREATMENT OF THE STATIONARY PHOTOELECTRIC PRIMARY AND SECONDARY CURRENTS IN CRYSTALS, DISCUSSED WITH THE MIXED KH/KBr CRYSTAL AS MODEL OF A SEMICONDUCTOR.—R. Hilsch & R. W. Pohl. (*Zeitschr. f. Physik.*, No. 1/2, Vol. 108, 1937, pp. 55–84.)

Authors' summary of principal results:—All photoelectric currents in crystals, independent of the type and magnitude of their conductivity in darkness, may be calculated from eqn. 56 [p. 71], in so far as two hypotheses are fulfilled: (1) an exponential law of loss, and (2) a homogeneous field inside the crystal even under illumination . . . The secondary photoelectric current occurs only in crystals where part of the darkness conductivity is *electronic*. It is explained from the known conductivity mechanism of semiconductors, without additional assumptions. Its magnitude is a well-defined multiple of the primary current and a saturation value may be attained. It may be calculated using the amplification factor given by eqns. 58 [p. 71] and 46 [p. 68] These new relations are confirmed by experiments on the mixed KH/KBr crystal . . . By suitable choice of the experimental conditions, a primary photoelectric current may be obtained which is proportional to the square root of the illumination intensity. These conditions are realised by our model semiconductor and its exponential loss-law. They are externally characterised by the occurrence of the visible cathode drop.

1549. NEGATIVE PHOTOCONDUCTIVITY IN POLYCRYSTALLINE CUPROUS OXIDE.—P. G. Borziak. (*Physik. Zeitschr. der Sowjetunion*, No. 4, Vol. 12, 1937, pp. 482–484: in English.)

MEASUREMENTS AND STANDARDS

1550. STUDY OF A FRAME AERIAL FOR THE MEASUREMENT OF FIELD STRENGTHS.—Gutton & Carbenay. (*See* 1411.)

1551. METHOD FOR THE TESTING OF LARGE NUMBERS OF OUTPUT VALVES, WITH AUTOMATIC DETERMINATION OF "KLIRR" FACTOR.—Wolf & Tillmann. (*See* 1433.)

1552. POWER MEASUREMENT FOR DECIMETRE WAVES.—K. Lämmchen. (*Hochf:tech. u. Elek:akus.*, Dec. 1937, Vol. 50, No. 6, pp. 190–197.)

Known methods of power measurement are here discussed as regards their accuracy and suitability, and technically applicable measuring instruments are described. § II deals with the matching of the external resistance to the generator and the energy losses occasioned thereby; Fig. 1 shows galvanic coupling when the load impedance is equal to the wave impedance of the generator; Fig. 2, galvanic coupling *via* an intermediate circuit tuned to a half- or quarter-wavelength; Fig. 3a, inductive current coupling; Fig. 3b, fixed capacitative coupling where the matching can be varied by galvanic coupling. In the experiments to compare the measuring instruments, a two-segment magnetron was used as an emitter (§ III); its anode current was used as an indicator of similar working conditions. The various types of power measurement

www.americanradiohistory.com

discussed (§ IV) are (1) measurement of the heat produced (Fig. 4), (2) measurements of the radiation from a dipole, (3) voltage measurement across a resistance, (4) measurement with a hot-filament air thermometer, (5) measurement with a thermo-element (Figs. 6–8), (6) measurement with incandescent lamps (Figs. 9–12). Fig. 14 shows the power measurements indicated by the various methods. The incandescent-lamp photometer was found to be the most trustworthy instrument; thermoelements are suitable if a constant-resistance instrument is required or very small powers are to be measured.

1553. A New H.F. Current Meter [Polariscopic Principle, for Ultra-High Frequencies].—H. Straubel. (*Hochfztech. u. Elekzakus.*, Dec. 1937, Vol. 50, No. 6, pp. 183–185.) *Cf.* 641 of February.

1554. Cathode-Ray Wave-Form Distortion at Ultra-High Frequencies [Extension of Libby's Work to Non-Sinusoidal Signals].—R. M. Bowie. (*Electronics*, Feb. 1938, Vol. 11, No. 2, pp. 18–19 and 29.) For Libby's paper *see* 272 of 1937.

1555. Cathode-Ray Phasemeter [measuring Phase Differences of 0.0005 Radian: also Small Capacities and Inductances: primarily designed for Measurement of Phase Angle of Human Body].—S. Bagno & A. Barnett. (*Electronics*, Jan. 1938, Vol. 11, No. 1, pp. 24–25 and 36.)

1556. A Measuring Process for the Detection of Internal Irregularities in Factory Lengths of Wide-Band Cables.—H. Lintzel. (*T.F.T.*, Nov. 1937, Vol. 26, No. 11, pp. 243–249.)

1557. Capacitance at Ultra-High Frequencies.—R. King. (*Phil. Mag.*, Feb. 1938, Series 7, Vol. 25, No. 167, pp. 339–363.)

The theoretical investigation dealt with in 1897 of 1936 (Field & Sinclair) is here extended to ultra-high frequencies by "examining the input admittance, first, of a circular parallel-plate condenser as a function of frequency and dimensions, second, of a number of such condensers joined to form a variable condenser." Fig. 3 shows an equivalent circuit representing the input admittance down to centimetre waves. The reactance curves for various condensers are computed and compared with experimental curves.

1558. Double-Compensator for A.C. with a Common Valve Amplifier [for Keinath's Method of Capacity and Loss Measurement].—Geyger: Keinath. (*Elektrot. u. Masch:bau*, No. 3, Vol. 56, 1938, p. 36: summary only.) For previous work *see*, for example, 3521 of 1936 and 1083 & 1090 of 1937.

1559. A Method for Calculating the Effect of Residual Inductances in High-Frequency Capacitance Measurements [in Determination of Dielectric Constants].—J. G. Miller. (*Journ. Am. Chem. Soc.*, Jan. 1938, Vol. 60, No. 1, pp. 42–46.)

1560. Dielectric Constant and Dielectric Losses of Solid Hydrogen Chloride in the Neighbourhood of Its Transition Point [Dispersion and Loss Measurements between 30 and 5000 m].—G. & E. Hettner & R. Pohlman. (*Zeitschr. f. Physik*, No. 1/2, Vol. 108, 1937, pp. 45–54.)

1561. Errors in the Measurement of Dielectric Losses at High Frequencies [by Substitution Method: Errors (increasing with Frequency) due to Lead Wires and Electromagnetic Coupling: Their Elimination by Special Lay-Out].—Akahira & others. (*Electrot. Journ.*, Tokyo, Jan. 1938, Vol. 2, No. 1, pp. 23–24.)

1562. H.F. Resonance Bridge [for measuring Circuit Resistances up to 30 Ohms at 0.5 Mc/s and 10 Ohms at 10 Mc/s].—C. L. Fortescue & G. Mole. (*Electrician*, 4th Feb. 1938, Vol. 120, p. 150.) Summary of I.E.E. paper. A smaller bridge is under construction for the range 10–100 Mc/s.

1563. A Double-Tube Vacuum-Tube Voltmeter [giving R.M.S. Values, so that Calibration is almost Constant for Radically Different Wave Forms].—W. C. Michels. (*Review Scient. Instr.*, Jan. 1938, Vol. 9, No. 1, pp. 10–12.)

1564. An Electronic Voltmeter with Logarithmic Indication [using Variable-Mu Pentodes].—M. Nuovo. (*La Ricerca Scient.*, Nov. 1937, Series 2, 8th Year, Vol. 2, No. 9/10, pp. 522–530.) *Cf.* Beauvais, 660 of February. For Taylor's logarithmic d.c. amplifier, referred to by the writer, *see* 2065 of 1937.

1565. The Measurement of Transient Maximum and Minimum Voltages by means of a Thyratron Potentiometer [with Self-Setting Thyratron Circuit].—A. Hickling & J. H. Bruce. (*Journ. Scient. Instr.*, Jan. 1938, Vol. 15, No. 1, pp. 22–24.)

1566. Measurement of High Insulation Resistances [*e.g.* of Millions of Megohms: Simple Method with Transportable Equipment, based on Time necessary for Charge or Discharge of a Condenser].—G. A. Beauvais. (*Ann. des Postes, T. et T.*, Jan. 1938, Vol. 27, No. 1, pp. 72–83.) Bringing up to date the 1925 method of Jacob & Bayard.

1567. A Wide-Range Vacuum Tube Resistance Bridge [for Resistances below 100 Ohms to over 200 000 Megohms: primarily for Measurements on Chemically Treated Wood].—I. I. Davies. (*Electronics*, Dec. 1937, Vol. 10, p. 36: summary only.)

1568. The Measurement of Very Small Currents (10^{-17} A) with the Help of Electrometer Valves [and the Attainment of a Record Amplification, for One Valve, of over 10^{-9}].—A. Rogozinski. (*Journ. de Phys. et le Radium*, Dec. 1937, Vol. 8, No. 12, Supp. pp. 127–128 S.)

www.americanradiohistory.com

1569. ELECTROMETER VALVES [Types T 113, 114, & 115].—Daene & Hubmann. (*See* 1435.)

1570. A SENSITIVE WATTMETER FOR LOW FREQUENCIES: WITH MANY APPLICATIONS: RANGE FROM MICROWATT TO KILOWATT, AT FREQUENCIES FROM ABOUT 10 C/S TO 100 KC/S: ALSO USEFUL AS VOLTMETER AND AMMETER.—W. Engelhardt. (*Funktech. Monatshefte*, Jan. 1938, No. 1, pp. 15–19.)

Based on the use of voltages, proportional to v and i, to control a valve combination in such a way that a current proportional to $v.i$ flows in the anode circuit; the mean d.c. value of this is measured by a d.c. instrument and gives the real power. The method is to generate, by a circuit (Fig. 1) of purely ohmic resistances, two voltages v_2 and v_3 equal to $v + ci$ and $v - ci$ respectively. By means of a valve-bridge circuit (Fig. 2) the difference of the squares of these two voltages is obtained: this gives $4c.v.i$. The d.c. component of this quantity is proportional to the real power. Unlike moving-coil wattmeters, the new apparatus can be 100% overloaded without damage. The accuracy is within about $\pm 2\%$, and the field of application is enormous.

1571. JOULEMETER [Electrodynamic Wattmeter with Damping proportional to Velocity, and Suspension of Negligible Torsion].—L. Néel & B. Persoz. (*Journ. de Phys. et le Radium*, Nov. 1937, Vol. 8, No. 11, Supp. pp. 121–122 S.)

1572. RAPID METHOD FOR THE STUDY OF BALLISTIC GALVANOMETERS IN CLOSED CIRCUIT.—J. Gilbert. (*Helvet. Phys. Acta*, Fasc. 1, Vol. 11, 1938, pp. 87–106: in French.)

1573. THE ADVANTAGES OF UNIT CONSTRUCTION OF ELECTRICAL LABORATORY INSTRUMENTS.—C. V. Drysdale. (*Journ. Scient. Instr.*, Jan. 1938, Vol. 15, No. 1, pp. 1–5.)

1574. THE ZERO SHIFT IN SENSITIVE MOVING-COIL GALVANOMETERS [traced to Magnetic Impurity in Solder, etc.].—Voss & Immelman. (*Journ. Scient. Instr.*, Jan. 1938, Vol. 15, No. 1, pp. 26–28.)

1575. THE "TOROID" ROTATABLE MULTIPLE SCALE FOR MEASURING INSTRUMENTS.—(*Bull. Assoc. suisse des Élec.*, No. 1, Vol. 29, 1938, pp. 18–19.)

1576. ON THE TASK OF THE RADIO MEASURING INSTRUMENTS INDUSTRY IN THE THIRD FIVE YEARS PLAN.—Kurovski. (*Izvestiya Elektroprom. Slab. Toka*, No. 11, 1937, pp. 28–31.)

1577. THE POTENTIAL PROBLEM OF A SPHERE LYING [Asymmetrically] BETWEEN INFINITE CONDUCTING PLANES [Formula for Capacity of Condenser].—C. Hurst. (*Phil. Mag.*, Feb. 1938, Series 7, Vol. 25, No. 167, pp. 282–290.)

1578. THE PRIMARY STANDARD OF MUTUAL INDUCTANCE OF THE NATIONAL PHYSICAL LABORATORY [Recent Improvements].—N. F. Astbury. (*Phil. Mag.*, Feb. 1938, Series 7, Vol. 25, No. 167, pp. 290–317.)

1579. ON THE SELF-INDUCTANCE OF CIRCULAR CYLINDRICAL COILS [Survey of Known Formulae: Possible Improvements: a New Approximate Formula resembling Perry's but Much More Exact].—P. Bunet. (*Rev. Gén. de l'Élec.*, 22nd Jan. 1938, Vol. 43, No. 4, pp. 99–106.) For Esnault-Pelterie's paper *see* 653 of February: it is also reproduced here on pp. 107–109.

1580. RIGOROUS CALCULATION OF THE COEFFICIENT OF INTERNAL SELF INDUCTANCE OF A LONG CYLINDRICAL CONDUCTOR OF CIRCULAR SECTION.—T. Kahan. (*Journ. de Phys. et le Radium*, Dec. 1937, Vol. 8, No. 12, Supp. pp. 148–150 S.)

1581. A WAVEMETER OF HIGHEST PRECISION: PART II.—H. H. Heinze. (*T.F.T.*, Sept. 1937, Vol. 26, No. 9, pp. 205–209.) For Part I *see* 4240 of 1937.

1582. HIGH-FREQUENCY MODULATION OF LIGHT: ITS APPLICATION TO THE MEASUREMENT OF VERY SHORT TIME INTERVALS.—P. Grivet. (*Comptes Rendus*, 31st Jan. 1938, Vol. 206, No. 5, pp. 339–342.)

1583. ON THE SYNCHRONISATION, AT THE FUNDAMENTAL FREQUENCY, OF THE ABRAHAM-BLOCH MULTIVIBRATOR.—N. M. Shilov & A. B. Sapozhnikov. (*Izvestiya Elektroprom. Slab. Toka*, No. 11, 1937, pp. 15–20.)

The operation of the Abraham-Bloch multivibrator is discussed and a relationship is established between the amplitude of the applied voltage and the frequency band-width within which synchronisation will take place. The permissible phase displacement of the applied voltage is also investigated. The theoretical results so obtained were verified experimentally by using a circuit (Fig. 5) in which the synchronising voltage from a l.f. oscillator was applied to the vibrator and to the deflecting coils of a cathode-ray oscillograph, while the output voltage of the vibrator was applied to the oscillograph plates. A comparison between the two sets of curves has shown that the accuracy of the theoretical curves is quite satisfactory (within about 12%).

1584. THE FREQUENCY OF LONGITUDINAL AND TORSIONAL VIBRATION OF UNLOADED AND LOADED BARS.—Davies. (*See* 1462.)

1585. THE DAMPING OF PIEZOELECTRIC OSCILLATIONS [Decay Processes photographed from C-R Oscillograph Image: Effect of Temperature on Logarithmic Decrement].—W. Bosshard & G. Busch. (*Helvet. Phys. Acta*, Fasc. 5, Vol. 10, 1937, pp. 329–330: in German.)

1586. ON THE THEORY OF THE ELECTRICAL PHENOMENA OF ROCHELLE SALT [Dielectric Constants measured along All Three Principal Axes: Temperature Dependence contradicts Fowler's Theory of "Co-operative States": etc.]—Busch, Hablützel, & Scherrer. (*Helvet. Phys. Acta*. Fasc. 5, Vol. 10, 1937, pp. 330–331: in German.)

www.americanradiohistory.com

1587. ACOUSTICAL DETECTION OF ELECTRICALLY WEAK VIBRATIONS IN QUARTZ PLATES [Tests on X- and Y-Cut and Other Plates: Some Thickness Vibrations produce Considerable Acoustical Effect with No (or Very Small) Electrical Effect: Effect of Humidity on Wave Velocity: etc.].—W. H. Pielemeier. (*Journ. Acoust. Soc. Am.*, Jan. 1938, Vol. 9, No. 3, pp. 212–216.)

1588. ON THE VARIETY OF VIBRATORY STATES OF A HOLLOW CYLINDER OF QUARTZ [Radial, Circular, Longitudinal, Torsional, Transverse, "Vibration de Cloches" ("Bell-Peal" Vibration rich in Higher Frequencies in Complex Relation to Fundamental), and Oscillation of Frequency depending only on Outer Radius: Corresponding Formulae].—Ny Tsi-Zé. (*Journ. de Phys. et le Radium*, Nov. 1937, Vol. 8, No. 11, Supp. pp. 115–117 S.)

1589. THE VARIOUS MODES OF VIBRATION OF PIEZOELECTRIC QUARTZ [Survey, including Quartz Cylinders and the Work of Ny Tsi-Zé and others].—J. Benoit. (*L'Onde Élec.*, Jan. 1938, Vol. 18, No. 193, pp. 22–36.)

1590. EQUIVALENT ELECTRICAL DATA OF PIEZOELECTRIC CRYSTALS AND THEIR MEASUREMENT.—R. Günther. (*Hochf:tech. u. Elek:akus.*, Dec. 1937, Vol. 50, No. 6, pp. 200–203.)

A method previously given by the writer (3186 of 1935) is here varied so that equivalent data of any size can be measured. The effect of the coupling capacity on the measurement is investigated (§ II, Figs. 1, 2). The relative change of natural frequency of the circuit on switching-in a known capacity is calculated (eqn. 4); from this, the equivalent capacity and inductance of the oscillating crystal can be determined. This is applied experimentally (Fig. 3); use of Zickner's condensers (Fig. 4; 1931 Abstracts, pp. 106–107) with a screen between the two insulated plates enables arbitrarily small additional capacities to be introduced. The equivalent impedance is measured by Pauli's method (Fig. 5; *Zeitschr. f. Physik*. Vol. 5, 1921, p. 376) in which additional impedances are introduced into the circuit. Some numerical results are given; the degree of uncertainty of the measurements is shortly discussed (§ IV).

1591. NEW CHARACTERISTICS OF PENTODE QUARTZ OSCILLATOR.—Takagi & Nakase. (*See* 1366.)

1592. "SCHWINGENDE KRISTALLE UND IHRE ANWENDUNG IN DER HOCHFREQUENZ- UND ULTRASCHALLTECHNIK" [Book Review].—L. Bergmann. (*E.T.Z.*, 20th Jan. 1938, Vol. 59, No. 3, p. 80.)

SUBSIDIARY APPARATUS AND MATERIALS

1593. DISCUSSION ON THE PAPER BY HOLLMANN & THOMA ON THE "DYNAMICS OF TRANSVERSELY- AND LONGITUDINALLY-CONTROLLED ELECTRON BEAMS."—Brüche, Recknagel, Gundlach: Hollmann & Thoma. (*See* 1353.)

1594. CATHODE-RAY WAVE-FORM DISTORTION AT ULTRA-HIGH FREQUENCIES.—Bowie. (*See* 1554.)

1595. A METHOD OF OBTAINING VARIABLE SENSITIVITY (MAKING FULL USE OF SCREEN DIMENSIONS) IN A CATHODE-RAY OSCILLOGRAPH, BY OPPOSED MAGNETIC AND ELECTRIC FIELDS.—C. H. F. Müller Company. (French Pat. No. 815 346, pub. 9.7.1937: *Rev. Gén. de l'Élec.*, 25th Dec. 1937, Vol. 42, No. 26, p. 207 D.)

1596. INVESTIGATIONS ON ELECTRON MIRRORS.—G. Hottenroth. (*Ann. der Physik*, Series 5, No. 8, Vol. 30, 1937, pp. 689–712.)

For previous work *see* 1112 of 1937. These experiments were based on the theoretical results of Henneberg & Recknagel (1568 of 1936) and of Recknagel (1954 of 1937). The scheme of the arrangement used is shown in Fig. 1. The system of electron-optical rays is given in Fig. 4. It was found that disturbing fields, in particular space-charges, had no important disturbing effect on the images. The action of electron lenses as mirrors is investigated in § 3 (Fig. 5; curves of focal length, Fig. 6, 8). They were found to be useful only as divergent mirrors; used as convergent mirrors they had marked spherical errors. "The transition from a single lens to a mirror is considered from the point of view of the intensity control of an electron beam." Mirror systems consisting of two or more electrodes (§ 5, Figs. 11, 14, 16) were built and their potential fields determined; convergent mirrors could be constructed. A charged metal surface was set up perpendicular to the optical axis; reflected electrons gave an image of its surface inequalities (Fig. 13). Many reproductions of the electron images obtained are given.

1597. THE AMPLIFICATION OF [H.F.] WIDE FREQUENCY BANDS [for Oscillographs, etc.].—Kleen. (*See* 1534.)

1598. AN ELECTRON MICROSCOPE FOR STUDYING THERMAL AND SECONDARY ELECTRON EMISSION.—Meschter. (*Review Scient. Instr.*, Jan. 1938, Vol. 9, No. 1, pp. 12–15.)

1599. ELECTRON EMISSION BY THE IMPACT OF POSITIVE IONS ON AN MgO-CATHODE OF AN ANOMALOUS GLOW DISCHARGE.—Güntherschulze & Bär. (*Zeitschr. f. Physik*, No. 11/12, Vol. 107, 1937, pp. 730–740.)

1600. THE EMISSION SPECTRA OF ZINC-SULPHIDE PHOSPHORS, AND THE EFFECT OF CADMIUM SULPHIDE ON THE EMISSION OF ZINC-SULPHIDE AND ALKALINE-EARTH-SULPHIDE PHOSPHORS [Connection between Emission Maxima and Molar Ratios of Components].—Rothschild. (*Zeitschr. f. Physik*, No. 1/2, Vol. 108, 1937, pp. 24–39.)

1601. THE CONDUCTIVITY OF THIN METALLIC FILMS ACCORDING TO THE ELECTRON THEORY OF METALS.—Fuchs. (*Proc. Camb. Phil. Soc.*, Jan. 1938, Vol. 34, Part 1, pp. 100–108.)

1602. "GLASS WORKING FOR LUMINOUS TUBES."—Eccles. (At Patent Office Library, London: Cat. No. 78 289: 142 pp.)

www.americanradiohistory.com

1603. A THERMIONIC TRIGGER [Simple Hard-Valve Relay Circuit requiring less than 10^{-6} A and giving up to 20 mA at 200 V: about 10 μsec. Cycle Time].—Schmitt. (*Journ. Scient. Instr.*, Jan. 1938, Vol. 15, No. 1, pp. 24–26.) Suitable for sweep-circuit synchronisation in c-r oscillography, production of rectangular waves of any desired frequency and phase, as frequency meter (more linear than thyratron type), etc.

1604. THE INFLUENCE OF RECTIFIER CELLS ON SWITCHING PHENOMENA.—Hornickel. (*See* 1492.)

1605. A NEW SYSTEM OF REMOTE CONTROL.—Kimball. (*See* 1390.)

1606. NEW METHOD OF STABILISATION OF ANODE CURRENT OF ELECTRON VALVES AGAINST VARIATION OF ANODE VOLTAGE.—Pinoir. (*See* 1434.)

1607. GRID-CONTROLLED RECTIFIERS FOR AMATEUR H.V. POWER SUPPLIES [combining Rectification with Keying: the Special Eitel-McCullough Mercury-Vapour KY21].—(*QST*, Feb. 1938, Vol. 22, No. 2, pp. 34 and 37.)

1608. THYRATRONS AND THEIR USES [as Motor: for Regenerative Braking: as Torque Amplifier: for Ship Propulsion: etc.].—Alexanderson. (*Electronics*, Feb. 1938, Vol. 11, No. 2, pp. 9–12.)

1609. THE APPLICATION OF A THYRATRON FOR AUTOMATIC REGULATION.—Vartel'ski. (*Izvestiya Elektroprom. Slab. Toka*, No. 10, 1937, pp. 43–57.) Further development of the work dealt with in 2744 of 1937.

1610. VOLUME-RECTIFICATION OF CRYSTALS [Experiments show Existence in Symmetrical Crystals, such as Galena and Iron Pyrites, between Mercury Electrodes: Surface- and Volume-Rectification must be Coexistent in All Rectifying Crystals, or Rectification is only Surface Effect].—Sen. (*Nature*, 25th Dec. 1937, Vol. 140, p. 1102.)

1611. EXPERIMENTS ON THE JOHNSEN-RAHBECK EFFECT [Ordinary Electrostatic Attraction: Metal Plates with Thin Lacquer Film give Same Results as Limestone and Metal Plate].—Bickley. (*Electronics*, Jan. 1938, Vol. 11, No. 1, pp. 51, 52.)

1612. SOLID DIELECTRICS IN AN ALTERNATING ELECTRIC FIELD [Theory assuming Extended Power Law for After-Effect Current].—F. Borgnis. (*Zeitschr. f. Physik*, No. 1/2, Vol. 108, 1937, pp. 107–127.)

1613. STEATITE CONTAINING BARIUM OXIDE [Improvement as regards Moisture Effects].—Oyama & others. (*Electrot. Journ.*, Tokyo, Jan. 1938, Vol. 2, No. 1, p. 22.)

1614. POLYSTYROLS IN HIGH-FREQUENCY TECHNIQUE.—Bogoroditski & others. (*Izvestiya Elektroprom. Slab. Toka*, Nos. 10 & 11, 1937, pp. 58–62 & 50–55.)

1615. ELECTROLYTIC CONDENSERS FOR A.C. OPERATION.—Tvertsyn & Morozov. (*Izvestiya Elektroprom. Slab. Toka*, No. 11, 1937, pp. 42–44.)

A report on experiments with condensers consisting of two oxidised aluminium plates immersed in electrolyte. A condenser of this type can be regarded as consisting of two electrolytic condensers connected in series and in opposition to each other (Fig. 1). Experiments have shown that these condensers are suitable for a.c. operation.

1616. TECHNICAL PROPERTIES OF SYNTHETIC RUBBER ["Perbunan" or "Buna N"], *and* QUALITIES OF ARTIFICIAL RUBBER COMPOUNDS: I.—Roelig: Anon. (*Zeitschr. V.D.I.*, 5th Feb. 1938, Vol. 82, No. 6, pp. 139–142: *Electrician*, 11th Feb. 1938, Vol. 120, p. 172.)

1617. SUMMARIES OF PAPERS ON SHELLAC.—(*Bull. Assoc. suisse des Élec.*, No. 23, Vol. 28, 1937, pp. 600–601: in German.)

1618. LACQUERS POSSESSING ELECTRICAL CONDUCTIVITY FOR STATIC SHIELDING.—(*Automobiltech. Zeitschr.*, 25th Aug. 1937, Vol. 40, No. 16, p. 414.)

1619. "ELEKTROTECHNISCHE ISOLIERSTOFFE" [Book Review].—Vieweg (Edited by). (*Gen. Elec. Review*, Jan. 1938, Vol. 41, No. 1, p. 66.)

1620. ON THE THEORY OF [the Change of Resistance of] SEMICONDUCTORS IN A MAGNETIC FIELD.—Gupta. (*Indian Journ. of Physics*, Dec. 1937, Vol. 11, Part 5, pp. 319–332.)

1621. MAGNETIC HYSTERESIS IN SINGLE CRYSTALS.—Jaanus & Schur. (*Physik. Zeitschr. der Sowjetunion*, No. 4, Vol. 12, 1937, pp. 383–388: in German.)

1622. PROPERTIES OF FERROMAGNETIC SUBSTANCES IN POWDERS [Dependence of Coercive Force on Mean Size of Granules: 4 Oersteds for Solid Magnetite, 260 for Micron-Diameter Powder: Magnetostrictive or Superficial-Layer Effect ?].—Sappa. (*La Ricerca Scient.*, Oct. 1937, Series 2, 8th Year, Vol. 2, No. 7/8, pp. 413–421.)

1623. MAGNETIC QUALITY OF IRON WIRE AS INFLUENCED BY THE DIAMETER [Experimental Curves: Critical Diameter giving Maximum Permeability: Control of Magnetic Quality by Coating with Suitable Material and afterwards Heat Treating], *and* IRON WIRE: INFLUENCE OF DIAMETER ON MAGNETIC QUALITY—RESULTS OF INDUSTRIAL IMPORTANCE.—Wall. (*Nature*, 29th Jan. 1938, Vol. 141, pp. 205–206: *Electrician*, 11th Feb. 1938, Vol. 120, p. 173.)

1624. RESEARCHES ON INITIAL MAGNETISATION [in Ni, Fe, Co, and Ni-Al: Validity of Rayleigh's Equation $k = a + bH$: Relation between a and b is Function of Mechanical and Heat Treatments and of Chemical Impurities: Effect of Magnetostriction: etc.].—Kahan. (*Ann. de Physique*, Jan. 1938, Series 11, Vol. 9, pp. 105–176.)

www.americanradiohistory.com

1625. LOSSES IN MAGNETIC MATERIALS [Nickel-Iron Alloys after Special Treatments give Permeabilities 60 to 800: All have approximately Same "After-Effect" Losses (about 4‰) at 20°C: etc.].—Goldschmidt. (*Helvet. Phys. Acta*, Fasc. 5, Vol. 10, 1937, pp. 328–329: in German.)

1626. FERROMAGNETISM AND ELECTRIC PROPERTIES: VII—THERMOFORCE, THOMSON COEFFICIENT, AND HEAT CONDUCTIVITY OF NICKEL [Anomalies near Curie Point: etc.].—Hammer. (*Ann. der Physik*, Series 5, No. 8, Vol. 30, 1937, pp. 728–744.)

1627. COLLECTIVE ELECTRON FERROMAGNETISM [Theory].—Stoner. (*Proc. Roy. Soc.*, Series A, 21st Jan. 1938, Vol. 164, No. 917, p. S 12: abstract only.)

1628. THEORY OF FERROMAGNETISM: I & II.—Oertel. (*Zeitschr. f. Physik*, No. 11/12, Vol. 107, 1937, pp. 746–757: 758–765.) Extension and improvement of Ludloff's theory and extension of theory of Schubin & Wonsowski.

1629. A NEW SLIDE RULE FOR RADIO ENGINEERS.—Perkins. (*Communications*, Jan. 1938, Vol. 18, No. 1, p. 21.)

STATIONS, DESIGN AND OPERATION

1630. RADIO-COMMUNICATIONS BY ULTRA-SHORT [and Micro-] WAVES [Survey].—Sutter & Ullrich. (*Bull. Assoc. suisse des Élec.*, No. 20, Vol. 28, 1937, pp. 469–486: in French.) Covering much the same ground as the English paper dealt with in 3890 of 1937.

1631. THE CALCULATION AND DESIGN OF H.F. WIRED BROADCASTING SYSTEMS.—Budischin & Deklotz. (*T.F.T.*, Oct. & Nov. 1937, Vol. 26, Nos. 10 & 11, pp. 226–231 & 249–256.)

1632. THE ECONOMICAL ASPECT OF BROADCAST STATIONS WITH VARIABLE CARRIER ["Hapug" Modulation—"Floating Carrier": including a H.F. Watt-Hour Meter for Study of Power Conditions in Aerial].—Schulze-Herringen. (*Lorenz-Berichte*, April/May 1937, No. 1/2, pp. 1–54.)

1633. PAPERS ON FLOATING-CARRIER DEVELOPMENTS AND ON RAISING THE EFFICIENCY OF RADIO-TELEPHONE SYSTEMS.—Mimietz: Tetelbaum. (*See* 1368 & 1370.)

1634. PAPERS ON VOLUME LIMITATION IN BROADCAST TRANSMISSIONS.—Doba: Hovgaard. (*See* 1375.)

1635. ON A.F. RECTIFICATION IN AUTOMATIC VOLUME CONTROLS.—B. S. Grigor'ev, V. S. Dulitski & H. F. Egorov. (*Izvestiya Elektroprom. Slab. Toka*, No. 11, 1937, pp. 40–44.)

Detectors in compressor and expandor circuits normally give outputs depending on the peaks of the input voltages. Since, however, the peak value of a complex wave is determined not only by the amplitudes of the wave components but also by their phase angles, it is clear that with such detectors it is not possible to restore the original shape of the wave. For correct reproduction of sound it is therefore necessary to use detectors, the outputs of which are integral functions of the applied a.f. voltages.

One such circuit employing two square-law rectifiers is proposed (Fig. 1) and an analysis of its operation shows that in this case the rectified output is independent of the phase relationship of the incoming wave components.

1636. SOME CONSIDERATIONS ON REGULATING CIRCUITS FOR AUTOMATIC VOLUME CONTROL ["Compandor"] SYSTEMS.—B. S. Grigor'ev, V. S. Dulitski, & A. F. Egorov. (*Izvestiya Elektroprom. Slab. Toka*, No. 10, 1937, pp. 36–43).

A theoretical discussion on the operation of "compandor" systems. The cases of (a) a sudden fall, (b) a sudden increase, and (c) a gradual increase in the input level to the compressor are examined. Two types of regulation are considered: (i) when the regulating voltage is obtained by rectifying a portion of the input to the regulator (direct regulation), and (ii) when a portion of the regulator output is rectified (indirect regulation); the general conclusion reached is that the necessary similarity between the change in compressor input and the corresponding change in expandor output can only be obtained when indirect regulation is used at the compressor and direct regulation at the expandor.

1637. AUTOMATIC ADJUSTMENTS IN RADIO-TELEPHONE CONTROL TERMINALS.—Mitchell. (*Bell Lab. Record*, Jan. 1938, Vol. 16, No. 5, pp. 157–161.)

1638. THE WORK OF THE 4TH MEETING OF THE C.C.I.R. [at Bucharest].—Corbaz. (*Bull. Assoc. suisse des Élec.*, No. 20, Vol. 28, 1937, pp. 490–492: in French.) *See* also 4371 of 1937.

1639. INTERNATIONAL CONFERENCES OF CAIRO, 1938, *and* CAIRO [and Amateur Allocation Proposals].—Jolliffe: Budlong. (*RCA Review*, Jan. 1938, Vol. 2, No. 3, pp. 283–288: *QST*, Feb. 1938, Vol. 22, No. 2, pp. 32–33 and 88 . . . 102.)

1640. THE GERMAN SHORT-WAVE AMATEUR RADIO NETWORK.—Diefenbach. (*Draht u. Aether*, Vol. 7, 1937, pp. 125–130.)

1641. THE FIRST INTER-AMERICAN RADIO CONFERENCE [at Habana].—Warner. (*QST*, Feb. 1938, Vol. 22, No. 2, pp. 9–11 and 68 . . . 74.)

1642. RECENT MARITIME RADIO LEGISLATION IN THE UNITED STATES.—Byrnes & Hurt. (*RCA Review*, Jan. 1938, Vol. 2, No. 3, pp. 326–335.)

1643. THE POSSIBLE APPLICATIONS OF ELECTRICAL WAVES [in the Various Bands from 10 cm to over 2000 m] IN MARINE NAVIGATION.—Hahnemann. (*Lorenz-Berichte*, Sept. 1937, No. 3, pp. 87–99.)

1644. DEVELOPMENTS IN THE AIRCRAFT RADIO AREA [including Snow Static, Blind Landing, Radio Compass, etc.].—(*Electronics*, Feb. 1938, Vol. 11, No. 2, pp. 20–23 and 52.)

www.americanradiohistory.com

1645. RADIO-TELEGRAPHY IN AUSTRIA.—Benesch. (*Elektrot. u. Maschbau*, No. 3, Vol. 56, 1938, pp. 29–33.)

GENERAL PHYSICAL ARTICLES

1646. PENETRATION INTO POTENTIAL BARRIERS IN SEVERAL DIMENSIONS.—Kapur & Peierls. (*See* 1287.)

1647. ON THE THEORY OF THE MOTION OF ELECTRONS IN GASES AND SEMICONDUCTORS [including Action of Electric and Magnetic Fields: Coulomb Interaction: etc.].—Davydov. (*Physik. Zeitschr. der Sowjetunion*, No. 3, Vol. 12, 1937, pp. 269–300: in English.)

1648. THE RATIO OF THE MASSES OF THE FUNDAMENTAL PARTICLES [Theoretical Relation between Proton/Electron Mass-Ratio and Fine-Structure Constant].—Flint. (*Proc. Phys. Soc.*, 1st Jan. 1938, Vol. 50, Part 1, No. 277, pp. 90–93: Discussion pp. 93–95.)

1649. THE ELECTRIC AND MAGNETIC FIELD VECTORS IN THE LIGHT OF THE ELECTRONIC THEORY [Changes and Improvements in the Faraday and Maxwell Field Representations].—Amrein. (*Bull. Assoc. suisse des Élec.*, No. 20, Vol. 28, 1937, pp. 486–489: in German.)

1650. THE INDETERMINATION OF ELECTROMAGNETIC POTENTIALS [Possible Substitutions conserving Form of Fundamental Equations].—Kwal. (*Comptes Rendus*, 24th Jan. 1938, Vol. 206, No. 4, pp. 238–240.)

1651. ELECTROMAGNETIC INDUCTION: RELATION BETWEEN INDUCTION AND RADIATION.—Hollingworth. (*Electrician*, 21st Jan. 1938, Vol. 120, pp. 61–62.)

1652. REDUCTION TO ABSOLUTE FORM OF MAXWELL'S LAW OF THE DISTRIBUTION OF MOLECULAR VELOCITY.—Labocetta. (*La Ricerca Scient.*, Nov. 1937, Series 2, 8th Year, Vol. 2, No. 9/10, pp. 536–538.)

1653. REDUCTION TO ABSOLUTE FORM OF PLANCK'S LAW OF THE ENERGY DISTRIBUTION IN THE SPECTRUM OF THE BLACK BODY.—Laboccetta. (*La Ricerca Scient.*, 15th/31st Dec. 1937, Series 2, 8th Year, Vol. 2, No. 11/12, pp. 634–635.)

1654. EXCITATION OF ATOMIC JETS BY ELECTRON BOMBARDMENT.—Planiol. (*Ann. de Physique*, Feb. 1938, Series 11, Vol. 9, pp. 179–235.)

MISCELLANEOUS

1655. OPERATIONAL SYSTEMS [Enumeration of Principal Systems: Avoidance of Errors due to Confusion].—McLachlan. (*Phil. Mag.*, Feb. 1938, Series 7, Vol. 25, No. 167, pp. 259–269.)

1656. OPERATIONAL REPRESENTATION OF DISCONTINUOUS FUNCTIONS [Laplace Transformation Method: Unit Function, Finite Unit Pulse, Inclined Pulse, Saw-Tooth and Meander Functions, Stepped-Function, Repeated Parabola, Pulse on *LR* Circuit].—Pipes. (*Journ. Franklin Inst.*, Jan. 1938, Vol. 225, No. 1, pp. 53–61.)

1657. ON THE NATURE OF ELECTRIC AND MAGNETIC QUANTITIES AND THE APPLICATION OF THE TENSOR NOTATION TO THE LAWS OF ELECTRICITY.—Bouthillon. (*Bull. Soc. franç. des Élec.*, Jan. 1938, Vol. 8, No. 85, pp. 41–62.)

1658. MECHANICAL SOLUTION OF ALGEBRAIC EQUATIONS [Machine for determining Real and Complex Roots of Eighth-Degree Equations: Determination of Indicial Admittance of Electric Networks: Application of Correspondence between Sine-Wave Quantities and Complex Numbers].—Hart & Travis. (*Journ. Franklin Inst.*, Jan. 1938, Vol. 225, No. 1, pp. 63–72.)

1659. THE EXPANSION OF AN ARBITRARY FUNCTION IN A SERIES OF CONAL OR TOROIDAL FUNCTIONS.—D. P. Banerji. (*Proc. Camb. Phil. Soc.*, Jan. 1938, Vol. 34, Part 1, pp. 30–32.)

1660. THE HANKEL TRANSFORM OF WHITTAKER'S FUNCTION $W_{k,m}(z)$ [computed by Operational Representation: Parabolic Cylinder Functions as Special Case].—A. Erdélyi. (*Proc. Camb. Phil. Soc.*, Jan. 1938, Vol. 34, Part 1, pp. 28–29.) For a lemma here applied *see* van der Pol & Niessen, 350 of 1936 and back reference.

1661. THE LAW OF ERROR AND THE COMBINATION OF OBSERVATIONS, *and* SIGNIFICANCE TESTS WHEN SEVERAL DEGREES OF FREEDOM ARISE SIMULTANEOUSLY.—Jeffreys. (*Proc. Roy. Soc.*, Series A, 21st Jan. 1938, Vol. 164, No. 917, p. S 8: p. S 11: abstracts only.)

1662. INDETERMINATION OF ACTION OF SYSTEMS FORMED OF A LARGE NUMBER OF ASSOCIATED ELEMENTARY CONTACTS, SUCH AS THE MICROPHONE OR THE COHERER [Theory].—Guillet. (*Comptes Rendus*, 31st Jan. 1938, Vol. 206, No. 5, pp. 333–335.)

1663. VECTOR TRANSFORMATION CHART [for Rapid Conversion from Polar to Rectangular Coordinates and *vice versa*].—Giacoletto. (*Electronics*, Feb. 1938, Vol. 11, No. 2, pp. 35–36.)

1664. SCHEMES OF CALCULATION FOR THE ANALYSIS OF OSCILLATING DIAGRAMS.—Vercelli. (*La Ricerca Scient.*, 15th/31st Dec. 1937, Series 2, 8th Year, Vol. 2, No. 11/12, pp. 609–621.)

1665. PHOTOELECTRIC FOURIER ANALYSIS OF GIVEN CURVES.—von Békésy. (*Journ. Acoust. Soc. Am.*, Oct. 1937, Vol. 9, No. 2, pp. 169–170.) Summary of the German paper dealt with in 3573 of 1937.

1666. "NOMOGRAPHIE" [Book Review].—Lukey. (*Zeitschr. f. tech. Phys.*, No. 1, Vol. 19, 1938, p. 20.)

www.americanradiohistory.com

1667. STUDY OF THE DISTRIBUTION OF THE ELECTRIC FIELD IN ELECTROSTATIC APPARATUS [Modified "Proof-Plane" Method].—Mendousse. (*Journ. de Phys. et le Radium*, Dec. 1937, Vol. 8, No. 12, Supp. p. 135 S.)

1668. SOME EXPERIMENTS AT RADIO FREQUENCIES [up to 3 Mc/s] ON SUPRACONDUCTORS [Pulsation tends to carry Material through Transition between Normal-Resisting and Supraconducting States: Double-Frequency Component: etc.].—Silsbee, Brickwedde, & Scott. (*Nature*, 8th Jan. 1938, Vol. 141, pp. 75–76.) The full paper appears in *Journ. of Res. of Nat. Bur. of Stds.*, Feb. 1938.

1669. THE CARRIER TELEPHONE ALPHABET [Type Designations and Their Explanation].—Bower. (*Bell Lab. Record*, Feb. 1938, Vol. 16, No. 6, pp. 208–212.)

1670. "ENCYCLOPÉDIE DE LA RADIOÉLECTRICITÉ: VOL. I" [Book Review].—Adam. (*Rev. Gén. de l'Élec.*, 22nd Jan. 1938, Vol. 43, No. 4, p. 98.)

1671. "PHYSIK UND TECHNIK DER GEGENWART" [Communications Engineering Section: Vol. I—Introduction to Theory and Technique of Decimetre Waves: Book Review].—Groos. (*E.T.Z.*, 30th Dec. 1937, Vol. 58, No. 52, p. 1406.) In the series edited by Fassbender. At Patent Office Library, London; Cat. No. 78 152.

1672. "REVUE DES RADIO-REVUES" [Book Review].—(*Rev. Gén. de l'Élec.*, 27th Nov. 1937, Vol. 42, No. 22, p. 674.)

1673. THE NECESSITY FOR A NEW ORGANISATION OF TECHNICAL DOCUMENTATION IN FRANCE.—Nagrodzki. (*Génie Civil*, 25th Dec. 1937, Vol. 111, pp. 553–554.)

1674. FREEDOM OF THE PRESS AND THE SCIENTISTS [Plea for Wiser Use of Facilities for Publication of Scientific Articles].—Stevens. (*Science*, 26th Nov. 1937, Vol. 86, pp. 491–492.)

1675. *Marconi Review*: EDITOR'S NOTE ON CERTAIN CHANGES [Quarterly in future: Increased Number of Pages: Articles involving Advanced Mathematical Treatment: Marconi Patents: etc.].—(*Marconi Review*, Jan./March 1938, No. 68, pp. 1–2.)

1676. ABBREVIATIONS [Absurdities in Use of "D.C." and "A.C.," particularly the Former: Suggestion of "Zero Frequency" (Abbreviation "Z.F.") applicable to Current, Voltage, Sound & Light Intensities, etc.].—Scroggie. (*Wireless Engineer*, Nov. 1937, Vol. 14, No. 170, pp. 606–607.) For another danger of "d.c." *see* 739 of February.

1677. TECHNICAL TRANSLATING [A.S.L.I.B. Paper].—Holmstrom. (*Engineer*, 10th Dec. 1937, Vol. 164, pp. 665–666.) *See* also Editorial, pp. 661–662.

1678. ELECTRICAL BIBLIOGRAPHY [and the New *Elektrotechnische Berichte*].—Windred. (*BEAMA Journal*, Dec. 1937, Vol. 41, No. 6, pp. 173–174.) *See* also 3924 of 1937.

1679. THE NATIONAL PHYSICAL LABORATORY: RADIO DEPARTMENT [Work during 1937].—(*Engineering*, 31st Dec. 1937, Vol. 144, pp. 736–737.)

1680. "V.D.E. REPORT" [Königsberg Conference, 1937: Book Notice].—Verband Deutscher Elektrotechniker. (*Electrician*, 4th Feb. 1938, Vol. 120, p. 162.)

1681. THE BUCHAREST MEETING OF THE C.C.I.R. [including the Proposed International Classification of Wavelengths—"Myriametre," "Kilometre," "Metre," "Centimetre," etc.].—Picault. (*Rev. Gén. de l'Élec.*, 8th Jan. 1938, Vol. 43, No. 2, p. 33.) *See* also 379 of January.

1682. THE YEAR'S PROGRESS [in Wireless Communications other than Broadcasting].—Chetwode Crawley. (*Wireless World*, 30th Dec. 1937, Vol. 41, pp. 658–660.)

1683. ROCHESTER, 1937 [I.R.E.–R.M.A. Meeting].—(*Electronics*, Dec. 1937, Vol. 10, pp. 11–15 and 67–71.)

1684. THE PHYSICAL SOCIETY'S EXHIBITION.—(*Wireless Engineer*, Feb. 1938, Vol. 15, No. 173, pp. 84–90: *Electrician*, 7th Jan. 1938, Vol. 120, pp. 7–10: *Wireless World*, 13th Jan. 1938, Vol. 42, pp. 35–37: *Engineer*, 21st Jan. 1938, Vol. 165, pp. 75–77.)

1685. THE LONDON RADIO EXHIBITION, *and* THE NINTH ITALIAN RADIO EXHIBITION.—(*L'Onde Élec.*, Jan. 1938, Vol. 18, No. 193, pp. 37–39: pp. 40–45.)

1686. THE PARIS COMPONENTS EXHIBITION.—Aisberg. (*Wireless World*, 17th Feb. 1938, Vol. 42, pp. 150–151.)

1687. THE 14TH BERLIN RADIO EXHIBITION.—Ancenys. (*L'Onde Élec.*, Oct. 1937, Vol. 16, No. 190, pp. 547–552.)

1688. OLYMPIA, 1937: A TECHNICAL SURVEY.—(*Wireless Engineer*, Oct. 1937, Vol. 14, No. 169, pp. 541–551.)

1689. THE RADIO EXHIBITION AT OLYMPIA.—Smith-Rose. (*Nature*, 11th Sept. 1937, Vol. 140, pp. 474–475.)

1690. ELECTRICITY AT THE PARIS INTERNATIONAL EXPOSITION, 1937, *and* THE BROADCASTING PAVILION AT THE PARIS INTERNATIONAL EXPOSITION.—Curchod: Adam. (*Rev. Gén. de l'Élec.*, 4th Dec. 1937, Vol. 42, No. 23, pp. 719–724: pp. 724–727.)

1691. GERMAN ELECTRICAL EXPORTS AND IMPORTS JANUARY–SEPTEMBER 1937.—(*E.T.Z.*, 9th Dec. 1937, Vol. 58, No. 49, pp. 1327–1328.)

1692. RADIO WAVES IN THE TREATMENT OF DISEASE [Selective Heating of Body Organs by Ultra-Short and Micro-Waves: the Importance of the Molecule "Tail"].—Potapenko. (*Science*, 17th Dec. 1937, Vol. 86, Supp. pp. 8–9.)

www.americanradiohistory.com

1693. THE MEASUREMENT OF THE H.F. POWER OF SHORT-WAVE-THERAPY GENERATORS [Direct-Reading Apparatus giving Energy absorbed by Patient].—Mittelmann. (*Elektrot. u. Maschinenbau*, No. 38, Vol. 55, 1937, pp. 461–465.) Vienna Short-Wave Congress paper. For previous work *see* 1339 of 1936.

1694. THE FIRST INTERNATIONAL CONGRESS FOR SHORT WAVES IN PHYSICS, BIOLOGY, AND MEDICINE: VIENNA 1937. — Stierstadt. (*Naturwiss.*, 3rd Dec. 1937, Vol. 25, No. 49, pp. 788–794.) *See* also 734 & 735 of February.

1695. KILLING PUPAE IN SILK COCOONS BY AN ULTRA-SHORT-WAVE FIELD.—Yamamoto & others. (*Nippon Elec. Comm. Eng.*, Nov. 1937, Special Issue, pp. 480–481.) For a constant d.c. input the order of effectiveness of different wavelengths was 7, 14, and 4 m: for a constant field intensity, however, it was 4, 7, and 14 m.

1696. ELECTROSMOSIS BETWEEN PLANE PARALLEL WALLS PRODUCED BY HIGH-FREQUENCY ALTERNATING CURRENTS [Theory: Dispersion of Osmosis not in Evidence up to 10^5 c/s].—Rosenhead & Miller, with Bikerman. (*Proc. Roy. Soc.*, Series A, 19th Nov. 1937, Vol. 163, No. 913, pp. 298–317.)

1697. THE HARMLESSNESS OF ALTERNATING VOLTAGES BELOW 65 VOLTS.—Kervran. (*Rev. Gén. de l'Élec.*, 4th Dec. 1937, Vol. 42, No. 23, pp. 728–731.)

1698. THOUSAND-CYCLE GENERATOR USED IN FISHING FOR ELECTRIC EELS.—Coates. (*Electronics*, Sept. 1937, Vol. 10, No. 9, pp. 40 and 42.)

1699. ELECTRIC IMPEDANCE OF MARINE EGG MEMBRANES [Increase in Capacity on Fertilisation probably due to Change in Plasma Membrane].—Cole. (*Nature*, 8th Jan. 1938, Vol. 141, p. 79.)

1700. THE ACTION OF SHORT ELECTRIC WAVES [on Biological Cell Structures: Effect of Inhomogeneous Field: Production of Convection Currents in Cells without Rise of Temperature].—Hasché. (*Naturwiss.*, 17th Dec. 1937, Vol. 25, No. 51, pp. 829–830.)

1701. ALLEGED SPECIFIC EFFECTS OF HIGH-FREQUENCY FIELDS ON BIOLOGICAL SUBSTANCES [Activity of Tetanus Toxin unaffected when Heating is Prevented].—Bateman, Loewenthal, & Rosenberg. (*Nature*, 18th Dec. 1937, Vol. 140, pp. 1063–1064.)

1702. ON THE COEFFICIENT OF DYING OUT OF COCKCHAFER LARVAE UNDER THE ACTION OF ELECTRIC CURRENT [50 c/s].—Turlygin. (*Comptes Rendus (Doklady) de l'Ac. des Sci. de l'URSS*, No. 4, Vol. 17, 1937, pp. 205–209: in English.)

1703. THE TRIOGRAPH: A THREE-PHASE CATHODE-RAY OSCILLOGRAPH FOR ELECTROCARDIOGRAPHY.—Hollmann. (*Electronics*, Jan. 1938, Vol. 11, No. 1, pp. 28–29.) For German papers on the subject *see* 3977 of 1937.

1704. A RADIOPHONIC TENSIOMETER [giving Instantaneous Indications of Arterial Pressure during Surgical Operations].—de Rougemont & Déjardin. (*Journ. de Phys. et le Radium*, Dec. 1937, Vol. 8, No. 12, Supp. p. 132 S.)

1705. CATHODE-RAY PHASEMETER FOR MEASUREMENT OF PHASE ANGLE OF HUMAN BODY.—Bagno & Barnett. (*See* 1555.)

1706. HAS ARTIFICIAL RESPIRATION A CHANCE OF SUCCESS IN CASES OF ELECTROCUTION?—(*Bull. Assoc. suisse des Élec.*, No. 23, Vol. 28, 1937, pp. 597–598: in French.)

1707. SOFT X-RAY RADIOGRAPHY [for Small Biological Specimens: Possibilities for Industrial Materials], *and* X-RAY TUBES FOR INDUSTRY [Recent Improvements, including Use of Electron Filter for Pulsating-Potential Circuits].—Sherwood: Isenburger. (*Electronics*, Dec. 1937, Vol. 10, pp. 8–10: Jan. 1938, Vol. 11, pp. 20–21.)

1708. EXTENSION OF INFRA-RED PHOTOGRAPHY TO WAVELENGTHS UP TO 10 MICRONS BY "EVAPOROGRAPHY."—Czerny & Mollet. (*Zeitschr. f. tech. Phys.*, No. 12, Vol. 18, 1937, pp. 582–584.)

1709. [Electro-Acoustic] METHOD OF DETERMINING THE ELASTIC MODULUS AND LOGARITHMIC DECREMENT OF MATERIALS.—Förster. (*E.T.Z.*, 18th Nov. 1937, Vol. 58, No. 46, p. 1246.)

1710. ELECTRICAL METHODS FOR THE MEASUREMENT AND RECORDING OF THE DYNAMIC ACTIONS PRODUCED IN ROTATING PARTS OF FAST TRAINS.—Corbellini. (*Alta Frequenza*, Nov. 1937, Vol. 6, No. 11, pp. 751–753: long summary only.)

1711. AN ELECTRICAL METHOD OF DETERMINING CABLE-SHEATH UNIFORMITY.—Laycock. (*Journ. I.E.E.*, Jan. 1938, Vol. 82, No. 493, pp. 101–104.)

1712. MAGNETO MAGNET [and Mercury-Vapour Grid-Controlled Rectifier] SELECTS PNEUMATIC TUBE CARRIERS.—(*Communications*, Oct. 1937, Vol. 17, No. 10, p. 26.)

1713. RECORDING RESISTANCE-WELDER SECONDARY CURRENTS.—Lord. (*Electronics*, Dec. 1937, Vol. 10, pp. 16–17 and 48.)

1714. [Electronic] REGULATOR MAINTAINS VOLTAGE FOR MOTION PICTURE PRINTERS.—Reid & Morris. (*Electronics*, Dec. 1937, Vol. 10, pp. 39, 40, 42, 44.)

www.americanradiohistory.com

1715. THYRATRONS AND THEIR USES [as Motor: for Regenerative Braking: as Torque Amplifier: for Ship Propulsion: etc.].—Alexanderson. (*Electronics*, Feb. 1938, Vol. 11, No. 2, pp. 9–12.)

1716. CAPACITY-OPERATED ["Hand-Sensitive"] CIRCUITS FOR ALARM PURPOSES.—Nentwig. (*E.T.Z.*, 6th Jan. 1938, Vol. 59, No. 1, pp. 21–22.)

Circuits given previously (4290 of 1936) had the disadvantage of giving, in the "alarm" condition, oscillations liable to cause radio interference. This is avoided in the new circuits, one of which (Fig. 3) has also an increased sensitivity; the other (Fig. 4) is of great simplicity, being non-oscillatory and using a differential-condenser setting of a grid-glow tube.

1717. THE MECHANICAL AMPLIFICATION OF SMALL DISPLACEMENTS.—Pollard. (*Journ. Scient. Instr.*, Feb. 1938, Vol. 15, No. 2, pp. 37–55.)

1718. MECHANICAL AND THERMAL INSTRUMENTS [for Measurement of Length, Mass, Time, Temperature, etc.].—Tomlinson. (*Journ. Scient. Instr.*, Feb. 1938, Vol. 15, No. 2, pp. 61–65.)

1719. HIGH-FREQUENCY MODULATION OF LIGHT: ITS APPLICATION TO THE MEASUREMENT OF VERY SHORT TIME INTERVALS.—Grivet. (*Comptes Rendus*, 31st Jan. 1938, Vol. 206, No. 5, pp. 339–342.)

1720. ELECTRICAL ANALOGY AS AN AUXILIARY METHOD IN PHOTOELASTICITY [Determination of Potential by Analogous Plane Electric Current Distribution].—Malavard. (*Comptes Rendus*, 4th Jan. 1938, Vol. 206, No. 1, pp. 38–39.)

1721. ON MODIFYING THE SPECTRAL SENSITIVITY OF A PHOTOCELL BY A LIGHT FILTER [to agree with That of the Eye].—L. A. Ventman. (*Journ. of Tech. Phys.* [in Russian], No. 18/19, Vol. 7, 1937, pp. 1898–1899.)

Curves 1 & 2 in Fig. 1 are the spectral sensitivity curves of the cell and eye respectively: curves 1 & 2 in Fig. 2 are the theoretical and experimental curves of the filter, and in Fig. 3 the following sensitivity curves are shown:—(1) of the cell alone, (2) of the eye, and (3) of the cell together with the filter. The filter was made of gelatine and pigments manufactured by A.G.F.A. were used. A formula for dyeing the gelatine is included.

1722. THE [Photometric] MEASUREMENT OF TURBIDITY IN COLOURED MEDIA.—Zerban & Sattler. (*Science*, 26th Nov. 1937, Vol. 86, p. 501.)

1723. DEVICES FOR THE PHOTOELECTRIC CONTROL OF EXPOSURE IN PHOTOGRAPHIC PRINTING.—Tuttle. (*Journ. Franklin Inst.*, Nov. 1937, Vol. 224, No. 5, pp. 615–631.)

1724. PORTABLE PHOTOELECTRIC TIMING APPARATUS [Photographic Relay, Chronograph, and Chronometer].—Nat. Bureau of Standards. (*Journ. Franklin Inst.*, Nov. 1937, Vol. 224, No. 5, pp. 647–648: short note only.)

1725. ELECTRONIC CIRCUITS FOR THE MEASUREMENT OF TIME AND SPEED [Completely Portable: Eccles-Jordan Trigger Circuit and a Modification].—Reich & Toomim. (*Review Scient. Instr.*, Dec. 1937, Vol. 8, No. 12, pp. 502–504.)

1726. DIRECT-CURRENT AMPLIFIER FOR PHOTOCELL APPLICATIONS [Application of High-Speed Automatic Potentiometer].—Gilbert. (*Electronics*, Jan. 1938, Vol. 11, No. 1, pp. 44 . . . 50.)

1727. A UNIVERSAL COUNTER [Combination of Geffcken-Richter Relay (Three-Electrode Neon Tube) with Neher-Harper Counter Circuit]: APPLICATION TO PHOTOELECTRIC CELLS [giving Greatly Extended Range of Sensitivity].—Dauvillier. (*Journ. de Phys. et le Radium*, Dec. 1937, Vol. 8, No. 12, Supp. p. 130 S.)

1728. THE COUNTING AND TOTALLING OF THE ENTRIES TO THE 1937 PARIS INTERNATIONAL EXPOSITION, BY PHOTOELECTRIC CELLS.—Poret. (*Rev. Gén. de l'Élec.*, 29th Jan. 1938, Vol. 43, No. 5, pp. 139–146.)

1729. CONSIDERATIONS IN APPLYING ELECTRONIC DOOR OPENERS.—Bendz. (*Electronics*, Feb. 1938, Vol. 11, No. 2, pp. 14–17.)

1730. A PHOTOCELL ANEMOMETER FOR THE STUDY OF ATMOSPHERIC TURBULENCE.—Faillettaz. (*Comptes Rendus*, 31st Jan. 1938, Vol. 206, No. 5, pp. 358–360.)

1731. APPLICATION OF THE PHOTOELECTRIC COLORIMETER FOR THE STUDY OF THE KINETICS OF SOME DEHYDROGENASE REACTIONS.—Ganapathy & Sastri. (*Current Science*, Bangalore, Jan. 1938, Vol. 6, No. 7, pp. 331–332.) By giving an accurate estimation of the concentration of methylene blue at any stage.

1732. A LIGHT-SENSITIVE CELL REFLECTOMETER [for Study of Translucent Plastics, etc.].—Baumgartner. (*Gen. Elec. Review*, Nov. 1937, Vol. 40, No. 11, pp. 525–527.)

1733. THE DEVELOPMENT OF A PHOTOELECTRIC SPECTROPHOTOMETER FOR HIGH-PRECISION MEASUREMENTS IN THE SHORT-WAVE ULTRA-VIOLET.—Deck. (*Helvet. Phys. Acta*, Fasc. 1, Vol. 11, 1938, pp. 3–57: in German.)

1734. A PROBLEM REGARDING PHOTOELECTRIC PHOTOMETRY [using a Barrier-Layer Cell].—Barletta. (*L'Elettrotec.*, No. 22, Vol. 24, 1937, pp. 711–713.)

www.americanradiohistory.com

Some Recent Patents

The following abstracts are prepared, with the permission of the Controller of H.M. Stationery Office, from Specifications obtainable at the Patent Office, 25, Southampton Buildings, London, W.C.2, price 1/- each.

ACOUSTICS AND AUDIO-FREQUENCY CIRCUITS AND APPARATUS

476 022.—Line signalling network for selectivity distributing broadcast, gramophone, or other programmes to a circle of subscribers.

Guided Radio Corporation. Convention date (U.S.A.) 29th April, 1936.

476 396.—Tone-control circuit for a low-frequency amplifier.

E. K. Cole and H. A. Brooke. Application date, 23rd June, 1936.

476 877.—Tone control for a low-frequency amplifier in which any distortion present at full volume is gradually decreased as the amplification is reduced.

O. B. Sneath. Application date, 13th June, 1936.

AERIALS AND AERIAL SYSTEMS

476 430.—High-frequency switch for coupling a concentric feed-line to an aerial without altering the surge impedance.

Baird Television and D. W. Pugh. Application date, 8th June, 1936.

476 726.—Aerial for radiating horizontally-polarised waves equally in all directions in the horizontal plane.

Marconi's W.T. Co. (assignees of H. O. Peterson). Convention date (U.S.A.) 19th May, 1936.

477 031.—Arrangement of matched transformers for coupling a single aerial through a transmission line to a remote receiver so as to cover a wide range of signal frequencies.

F. R. W. Strafford and Belling & Lee. Application date 16th May, 1936.

477 281.—Combined strain-insulator and screened transformer for coupling an aerial to a transmission line feeding a distant wireless set.

A. G. Haslam; F. R. W. Strafford: and Belling & Lee. Application date 22nd June, 1936.

DIRECTIONAL WIRELESS

476 215.—Rotating-beam system of direction finding comprising means for rendering the critical observations "secret" except to those listeners provided with authorised receivers.

Standard Telephones and Cables (assignees of Le Materiel Telephonique Soc. Anon.). Convention date (France) 10th April, 1936.

476 289.—Glow-lamp indicator for a radio-goniometer of the direct-reading type.

M. Parisier and Soc. des Etablissements Henry-Lepaute. Convention date (France) 26th June, 1936.

476 541.—Directive relay system for two-way or interchange signalling on short waves.

Telefunken Co. Convention date (Germany) 8th May, 1936.

476 721.—Direction finding system in which the signal voltages received on a vertical and frame aerial are combined after phase adjustment.

F. J. Hooven (addition to 472 111). Application date 3rd March, 1936.

477 346.—Wireless direction-finder fitted with a moving scale member which gives an automatic correction for quadrantal error.

Marconi's W.T. Co. and R. J. Kemp. Application date 25th June, 1936.

RECEIVING CIRCUITS AND APPARATUS

(See also under Television)

475 744.—Variable-rato driving-movements for fine-tuning a wireless receiver.

Burndept; R. P. Richardson; and H. H. V. Stanley. Application date 27th May, 1936.

475 900.—Automatic tuning system in which the control voltage is derived from two branch circuits one of which is broadly tuned whilst the other is highly selective.

J. Robinson. Application date 29th May, 1936.

476 018.—Thermionic-valve class B or class C amplifier utilising "negative" feed-back to minimise non-rectilinear distortion.

Standard Telephones and Cables (assignees of J. O. Edson). Convention date (U.S.A.) 1st April, 1936.

476 069.—Amplifier with means for reducing or eliminating an undesirable frequency, such as that of a heterodyne whistle.

P. K. Turner, and Hartley Turner Radio. Application date 11th August, 1936.

476 179.—Regulation of class A, B, and AB amplifiers by means of a third valve, inserted in the anode circuit and subjected to a control voltage derived from the signal.

Rediffusion and P. Adorjan. Application date, 4th June, 1936.

476 218.—Method of minimising the effects of atmospheric disturbances, particularly in the low-frequency stages of a wireless receiver.

Telefunken Co. Convention date (Germany) 9th April, 1936.

476 486.—Auxiliary pentode valve used for automatically varying the selectivity of a wireless receiver.

Marconi's W.T. Co. Convention date (U.S.A.) 31st May, 1935.

476 578.—Switch for tuning a wireless receiver to any one of a number of predetermined stations.

E. W. Hobbs. Application dates 10th June and 3rd July, 1936.

476 874.—Tuning arrangement for a wireless receiver in which the movement of a resiliently-mounted tuning condenser is prevented from affecting the scale or dial.

W. J. Brown. Application date 13th July, 1936.

477 048.—Circuit arrangement for eliminating "whistles" and similar interference from a superhet set.

E. S. V. Truefitt. Application date 25th June, 1936.

www.americanradiohistory.com

477 096.—Indicator scale for a wireless receiver designed to facilitate the selection or tuning of stations in their alphabetical order.

Murphy Radio and J. D. A. Boyd. Application date 16th July, 1936.

477 217.—Visual tuning indicator for a wireless receiver in which the brightness of the cathode glow increases with current, but the area of glow remains substantially constant.

The General Electric Co. and W. H. Peters. Application date 29th June, 1936.

477 270.—Compensating for interelectrode capacity coupling in valves used for handling ultra-short waves.

Standard Telephones and Cables (assignees of F. B. Llewellyn). Convention date (U.S.A.) 6th October, 1936.

TELEVISION CIRCUITS AND APPARATUS

For Transmission and Reception.

476 181.—Rotating disc designed to give interlaced scanning in television.

Radio-Akt D. S. Loewe. Convention dates (Germany) 11th and 25th June, 1935.

476 233.—Cathode-ray type of television receiver in which the electron stream first forms an electron image on a mosaic screen the emission from which is projected on to a fluorescent screen.

Baird Television and D. M. Johnstone. Application date 4th June, 1936.

476 256.—Inductive circuit designed to offer high resistance to currents of very high frequency, particularly television signals.

Baird Television and D. W. Pugh. Application date 6th June, 1936.

476 311.—Cathode-ray tube fitted with an "open" grid or mosaic of photo-sensitive cells across which electrostatic fields of force are formed by a projected picture to control the scanning stream.

R. Koempfner. Application dates 4th June, 27th July, and 18th August, 1936.

476 336.—Circuit comprising a valve and biased rectifier for generating "saw-toothed" oscillations suitable for television scanning.

F. W. Cackett (communicated by the Telefunken Co.). Application date 4th May, 1936.

476 338.—Cathode-ray tube comprising a photo-sensitive cathode and a fluorescent screen for producing images of high intensity.

British Thomson-Houston Co. Convention date (Germany) 8th June, 1935.

476 383.—Scanning device of the vibrating-mirror type for television.

W. R. Milden Stein and J. F. Best. Application date 7th May, 1936.

476 417.—Applying control and focusing voltages to the electron stream of a cathode-ray tube.

C. H. F. Muller Akt-Ges. Convention date (Germany) 29th June, 1936.

476 437.—Method of fixing or mounting a fluorescent screen to the wall of a cathode-ray tube.

Baird Television; B. Hodgson; and W. O. Williams. Application date 8th June, 1936.

476 714.—Scanning system for television by moving lines in an electrostatic field.

H. Browde. Application date 18th December, 1936.

476 808.—Television system in which both the image and synchronising signals are transmitted over a single channel, two separate scanners being used in reception.

H. R. Lubcke. Application date 15th June, 1936.

476 865.—Cathode-ray tube for transforming light into electrical energy by utilising the electric field produced by light incident upon a fluorescent or photo-sensitive screen.

V. Zeitline; A. Zeitline; and V. Kliatchko (assignees of Cie D'Usines A. Gaz). Convention date (France) 9th May, 1935.

476 935.—Television system designed to give rapid automatic volume control, particularly when signalling to aeroplanes or other moving craft.

A. D. Blumlein. Application date 15th May, 1936.

476 935.—Automatic gain control with particularly rapid action, suitable for television signals received on an aeroplane or other moving craft.

A. D. Blumlein. Application date 15th May, 1936.

477 038.—Time-base circuit for scanning in television, in which the amplitude of the output or "sweep" voltage is independent of that of the applied synchronising impulse.

Philco Radio and Television Corpn. Convention date (U.S.A.) 7th June, 1935.

477 043.—Cathode-ray tube in which a number of separate electron streams simultaneously produce the same number of picture points on a common viewing screen.

Radio-Akt. D. S. Loewe. Convention date (Germany) 20th June, 1935.

477 216.—The use of phosphorescence to intensify the electron-image formed by the projection of a picture on the photo-electric screen of a television transmitter.

The British Thomson-Houston Co. Convention date (Germany) 25th July, 1935.

477 240.—Method of coupling a photo-electric cell, or an iconoscope tube as used in television, to the first stage of a valve amplifier.

Standard Telephones and Cables (assignees of Le Materiel Telephonique). Convention date (France) 16th May, 1936.

477 253.—Compensating for the "false brightness" or similar interference effects produced by a cathode-ray television transmitter of the iconoscope type.

Telefunken Co. Convention date (Germany) 13th May, 1936.

477 326.—Television transmitter in which the initial electron emission from a photo-sensitive surface in a cathode-ray tube is intensified by the action of one or more intermediate electrodes.

V. Zeitline; A. Zeitline; and V. Kliatchko (assignees Cie des Compteurs a Gaz). Convention date (France) 18th May, 1935.

477 329.—Signalling system, particularly for combining and afterwards separating different pulses such as those used for scanning in television.

Philco Radio and Television Corpn. Convention date (U.S.A.) 17th June, 1935.

477 345.—Cathode-ray tube fitted with metallic target electrodes which intensify the initial electron stream by producing secondary emission.

Marconi's W.T. Co. and L. M. Myers. Application date 25th June, 1936.

www.americanradiohistory.com

477 355.—Televising from a moving vehicle, particularly an aeroplane, by a film method which allows the rate of transmission to be varied independently of the rate of recording.

Baird Television; V. Jones; and T. M. C. Lance. Application date 26th June, 1936.

477 362.—Arrangement of the water-cooled valves used for transmitting short waves, particularly for television.

Marconi's W.T. Co.; N. E. Davis; E. Green; and A. W. Hall. (addition 434 821), Application date 26th June, 1936.

TRANSMITTING CIRCUITS AND APPARATUS

(See also under Television)

475 750.—Modulating system in which the amplitude of a carrier-wave is varied during comparatively-short transient periods.

A. G. Cooley. Application date 20th July, 1936.

476 020.—Push-pull oscillator utilising the principle of secondary emission for the production of ultra-short waves.

Marconi's W.T. Co. (assignees of E. G. Linder). Convention date (U.S.A.), 30th April, 1936.

476 024.—Transmitting and amplifying ultra-short-wave signals over a line of the so-called "dielectric-guide" type.

Standard Telephones and Cables (assignees of Le Materiel Telephonique Soc. Anon.). Convention date (France) 19th May, 1936.

476 187.—Continuously evacuated power valve for short-wave "beam" or television transmission.

J. H. Ludlow and Metropolitan-Vickers Electrical Co. Application date 19th June, 1936.

476 188.—High-powered screened-grid valve for transmitting short waves.

J. H. Ludlow and Metropolitan-Vickers Electrical Co. Application date 19th June, 1936.

476 722.—Phase-splitting circuits for a single-sideband modulating system.

Marconi's W.T. Co. (assignees of C. W. Hansell). Convention date (U.S.A.) 3rd April, 1936.

476 799.—High-frequency transmission line for handling a frequency-band of the order of 100 kilocycles.

M. Bowman-Manifold. Application dates 3rd March, 1936 and 18th February, 1937.

476 915.—Screened constant-gain amplifier for coupling two sections of a transmission line.

Siemens & Halske Akt. Convention dates (Germany) 9th March and 14th December, 1936.

477 175.—Tuning, control and change-over circuits for a two-way radio-communication system.

Standard Telephones and Cables (assignees of J. B. Bishop and W. M. Knott). Convention date (U.S.A.) 26th September, 1935.

475 995.—Electrode arrangement of an electron-discharge device of the "image dissector" type utilising secondary emission for transmitting television signals.

Zeiss Ikon Akt-Ges. Convention date (Germany) 24th March, 1936.

476 090.—Cathode for an electron-discharge tube in which the surface on which the emissive material is laid is made of copper.

N. V. Philips' Lamp Co. Convention date (Holland), 19th February, 1936.

476 132.—Electrode arrangement for a valve of the variable-mu type designed to give a gradual transition from the space-charge region up to saturation.

Telefunken Co. Convention date (Germany) 13th March, 1936.

476 237.—Cathode-ray tube in which the primary electrons emitted from a photo-sensitive cathode fall upon a secondary-emission surface to intensify the image.

W. E. Williams. Application date 4th June, 1936.

476 395.—Electrode structure and assembly of a valve designed to handle short-wave oscillations at a high level of power.

J. M. Dodds; J. H. Ludlow; and Metropolitan-Vickers Electrical Co. Application date 19th June, 1936.

476 385.—Method of preparing "spray-painted" oxide cathodes for valves and other electron-discharge tubes.

Egyesult Izzolampa Es. Villamossagi Reszvenytarsasag. Convention date (Hungary) 5th June, 1935.

476 394.—Construction of low-inductance grid for a power valve designed to handle wavelengths of ten metres or less.

J. M. Dodds; J. H. Ludlow; and Metropolitan-Vickers Electrical Co. Application date 19th June, 1936.

476 530.—Construction of control magnet for a valve of the magnetron type used for handling centimetre waves.

H. J. C. Forrester (communicated by J. Pintsch Akt. Ges.). Application date 4th June, 1936.

476 567.—Magnetic control structure for a short-wave valve of the magnetron type.

J. Pintsch Akt-Ges. Convention date (Germany) 4th June, 1935.

476 675.—Construction of heating filament for the indirectly heated cathode of a valve.

Radio-Akt D. S. Loewe. Convention date (Germany) 10th April, 1935.

476 695.—Valve formed with a "resonator" space for generating or amplifying ultra-short waves.

M. V. "Meaf." Convention date (Germany) 29th June, 1935.

476 718.—Electrode structure and assembly of a power amplifying valve.

Standard Telephones and Cables. Convention date (U.S.A.) 16th July, 1936.

476 758.—Thermionic "power" valve in which the cathode structure is made prismatic in shape.

The M.O. Valve Co. and R. Le Rossignol. Application date 10th July, 1936.

476 815.—Electron multiplier in which the secondary emission electrodes are arranged in approximately conical formation.

Ferranti and J. C. Wilson. Application date 17th June, 1936.

www.americanradiohistory.com

476 817.—Valve formed with a "resonator" chamber for generating or rectifying centimetre waves.

J. Pintsch Akt. Convention date (Germany) 21st December, 1935.

476 908.—Thermionic cathode in which the interior of a helix of refractory metal is filled with a paste of alkaline nitrate or similar substance of high thermionic emissivity.

The General Electric Co. (communicated by Patent Treuhand Ges.) (addition to 451 989). Application date 2nd November, 1936.

477 262.—Sensitive coating for the "target" electrodes used in an amplifier depending upon secondary emission.

N. V. Philips' Lamp Co. Convention date (Holland) 23rd June, 1936.

477 341.—Electron tube comprising an adjustable "resonator" chamber, suitable for generating or amplifying ultra-short waves.

J. Pintsch Akt. Convention date (Germany) 28th June, 1935.

477 347.—Construction of electron multiplier tube in which the "targets" or secondary emitters are arranged so as to minimise any loss of electrons.

Marconi's W.T. Co. (assignees of E. A. Massa Junr.; and L. Malter). Convention date (U.S.A.) 31st July, 1935.

SUBSIDIARY APPARATUS AND MATERIALS

475 788.—Balanced pick-up, capable of free movement horizontally, particularly for tracking hill-and-dale records.

A. F. Sykes. Application dates 21st February, 1936 and 9th and 11th February, 1937.

475 833.—Construction of electrolytic condenser.

L. M. Meyer (communicated by N. V. Philips' Lamp Co.). Application date 1st October, 1936.

475 839.—Construction of magnetic movement for a loud speaker designed to facilitate assembly and repair.

I. Walker (assignee of G. E. Sundstrom). Convention date (U.S.A.), 1st February, 1936.

475 869.—Fibrous coating for the diaphragm of a loud-speaker.

Murphy Radio and A. K. Webb. Application date 21st May, 1936.

475 964.—Inductance coil wound and supported to offset the effect of temperature variations.

H. W. Cox. Application date 29th April, 1936.

475 681.—Rectifier tube mounted in a thermostatically-controlled container.

Marconi's W.T. Co. (assignees of J. L. Finch and L. L. Young). Convention date (U.S.A.) 15th August, 1935.

475 735.—Cam-controlled movement to "balance" the lid of the cabinet of a wireless or television receiver at all points, so as to facilitate lifting and to prevent "slamming" when closing it down.

Baird Television and E. J. Treasure. Application date, 23rd April, 1936.

475 757.—Method of preparing a dry electrolytic condenser, and the electrotype composition used in it.

Mallory Patents Holding Co. Convention date (U.S.A.) 7th January, 1936.

476 155.—Condenser made of insulating strips interposed with strips of aluminium foil.

N. V. Philips' Lamp Co. Convention date (Germany) 27th June, 1936.

476 235.—Combined strain insulator and coupling transformer for a wireless aerial.

The Gramophone Co. and L. A. Chapman (addition to 444 494). Application date 4th June, 1936.

476 250.—Dry contact rectifier in which a proportion of sulphur is mixed with the sulphide to prevent the formation of particles of free copper by the heat generated.

Standard Telephone and Cables and L. J. Ellison. Application date 5th June, 1936.

476 701.—Variable tuning inductance for ultra-short-wave working.

Telephone Manufacturing Co. and L. H. Paddle. Application date 14th July, 1936.

476 753.—Energising the field windings of a moving-coil loud speaker from the supply mains.

E. K. Cole and A. E. Falkus. Application date 27th June, 1936.

476 790.—Method of producing the semi-conducting coatings used for dry-contact rectifiers and photo-sensitive cells.

The British Thomson-Houston Co. Convention date (Germany) 20th June, 1936.

476 846.—Construction of and materials for dry-contact rectifiers.

The British Thomson-Houston Co. Convention date (Germany) 4th February, 1936.

476 889.—Cutting and mounting a piezo-electric crystal used for frequency control.

Marconi's W.T. Co. (assignees of C. F. Baldwin and S. A. Bokovoy). Convention date (U.S.A.) 29th June, 1935.

476 973.—Construction and mounting of high-frequency inductances and transformers and of their powdered-iron cores.

The Plessey Co. and F. Kammer. Application date 26th June, 1936.

477 172.—Gramophone pick-up in which the pole faces of the magnet are arranged one behind the other so as to lessen the overall width of the device.

Cosmocord (communicated by W. M. Braun). Application date 13th July, 1936.

477 209.—Inductance-capacity networks for filtering or separating out electric currents of different frequencies.

W. Cauer and W. Brandt. Application date 17th April, 1936.

477 227.—Multiple-wire low-resistance windings for the coils of a loud speaker.

R. Stolojian (addition to 462 224). Convention date (Czechoslovakia) 9th November, 1935.

477 344.—Mounting a piezo-electric crystal between electrodes of "metal wool" in an evacuated glass bulb.

Marconi's W.T. Co.; O. E. Keall; and E. O. Smith. Application date 25th June, 1936.

477 358.—Arrangement for testing or monitoring line conditions in a carrier-wave signalling system.

Standard Telephones and Cables and B. B. Jacobsen. Application date 26th June, 1936.

www.americanradiohistory.com